iSeries

Temperature & Process Controller

Operator's Manual

MADE IN THE U.S.A.

NEWPORT Electronics, Inc.

http://www.newportUS.com/i

Additional products from

NEWPORT Electronics, Inc.

Counters	Rate Meters
Frequency Meters	Timers
PID Controllers	Totalizers
Clock/Timers	Strain Gauge Meters
Printers	Voltmeters
Process Meters	Multimeters
On/Off Controllers	Soldering Iron Testers
Recorders	pH pens
Relative Humidity Transmitters	pH Controllers
	pH Electrodes
Thermocouples	RTDs
Thermistors	Thermowells
Wire	Flow Sensors

For Immediate Assistance
In the U.S.A. and Canada: 1-800-NEWPORT®
In Mexico: (95) 800-NEWPORT℠
Or call your local NEWPORT Office.

NEWPORTnet℠ On-Line Service	**Internet e-mail**
www.newportUS.com	info@newportUS.com

It is the policy of NEWPORT to comply with all worldwide safety and EMC/EMI regulations that apply. NEWPORT is constantly pursuing certification of its products to the European New Approach Directives. NEWPORT will add the CE mark to every appropriate device upon certification.

The information contained in this document is believed to be correct but NEWPORT Electronics, Inc. accepts no liability for any errors it contains, and reserves the right to alter specifications without notice.

WARNING: These products are not designed for use in, and should not be used for, patient connected applications.

TRADEMARK NOTICE: , NEWPORT, NEWPORT®, **newportUS.com,** and the "Meter Bezel Design" are trademarks of NEWPORT Electronics, Inc.

PATENT NOTICE: This product is covered by one or more of the following patents: U.S. Pat. No. Des. 336,895; 5,274,577; 6,243,021 / CANADA 2052599; 2052600/ ITALY 1249456; 1250938 / FRANCE BREVET No. 91 12756 / SPAIN 2039150; 2048066 / UK PATENT No. GB2 249 837; GB2 248 954 / GERMANY DE 41 34398 C2. The is a Trademark of OMEGA Engineering, Inc. Used Under License. Other US and International Patents pending or applied for.

This device is marked with the international caution symbol. It is important to read the Setup Guide before installing or commissioning this device as it contains important information relating to safety and EMC.

TABLE OF CONTENTS

Part 1: Introduction....2
- 1.1 Description....2
- 1.2 Safety Considerations....3
- 1.3 Before You Begin....4

Part 2: Setup....5
- 2.1 Front Panel....6
- 2.2 Rear Panel Connections....7
- 2.3 Electrical Installation....7
  - 2.3.1 Power Connections....7
  - 2.3.2 Thermocouple - Input Connection....8
  - 2.3.3 Two / Three / Four Wire RTD-Hookups....9
  - 2.3.4 Process Current - Wiring Hookup....10
  - 2.3.5 Process Voltage - Wiring Hookup....10
  - 2.3.6 Wiring Outputs - Wiring Hookup....11
  - 2.3.7 Dual Display Color Setup....13

Part 3: Operation: Configuration Mode....14
- 3.1 Introduction....14
  - Turning your Instrument On for the First Time
  - Buttons Functions in Configuration Mode
- 3.2 Menu Configuration....15
  - 3.2.1 ID Number....16
  - 3.2.2 Setpoints....17
  - 3.2.3 Configuration Menu....18
  - 3.2.4 Input Type Menu....18
    - Input Type (Thermocouple)....19
    - Input Type (RTD)....20
    - Input Type (Process)....21
  - 3.2.5 Reading Configuration Menu....21
  - 3.2.6 Alarm 1 Menu....25
  - 3.2.7 Analog Output (Retransmission) Menu....29
  - 3.2.8 Alarm 2 Menu....32
  - 3.2.9 Loop Break Time Menu/Field Calibration....33
  - 3.2.10 Output 1 Menu....35
  - 3.2.11 Output 2 Menu....42
  - 3.2.12 Ramp and Soak Menu....45
  - 3.2.13 ID Code Menu....47
  - 3.2.14 Communication (Options) Menu....49
  - 3.2.15 Display Color Selection Menu....55

Part 4: Specifications....58

Part 5: Factory Preset Values....62

Part 6: CE APPROVAL INFORMATION....64

LIST OF FIGURES:

Figure 2.1 Front Panel Display 5
Figure 2.2 Rear Panel Power and Output Connector Labels 6
Figure 2.3 Rear Panel Input Connector Labels 6
Figure 2.4 Main Power Connections 7
Figure 2.5 Thermocouple Wiring Hookup 8
Figure 2.6 Two/Three/Four-wire RTD
a) RTD-1000 ohm and 500 ohm Wiring Hookup 9
b) RTD-100 ohm Wiring Hookup 9
Figure 2.7 Process Current Wiring Hookup
(Internal and External Excitation) 10
Figure 2.8 Process Voltage Wiring Hookup
a) Without Sensor Excitation 10
b) With Sensor Excitation 10
Figure 2.9 Output Connections:
a) Mechanical Relay and SSR Outputs – Wiring Hook up 11
b) Pulse and Analog Outputs – Wiring Hook up 11
Figure 2.10 Typical Application 11
Figure 2.11 Communication Output:
a) RS-232 Output – Wiring Hook up 12
b) RS-485 Output – Wiring Hook up 12
Figure 2.12 Excitation Output 12
Figure 2.13 Snubber Circuits Wiring Hookup 12
Figure 2.14 i/8DH and i/8DV Locations of S1 and Jumper Positions 13
Figure 2.15 i/16D Location of S1 and Jumper Positions 13
Figure 3.1 Flow Chart for ID and Setpoints 15
Figure 3.2 Flow Chart for Configuration Menu 18
Figure 3.3 Flow Chart for Input Type Menu 18
Figure 3.4 Flow Chart for Reading Configuration 21
Figure 3.5 Flow Chart for Alarm 1 25
Figure 3.6 Flow Chart for Analog Output (Retransmission) 29
Figure 3.7 Flow Chart for Alarm 2 32
Figure 3.8 Flow Chart for Loop Break Time/Field Calibration 33
Figure 3.9 Flow Chart for Output 1 35
Figure 3.10 Flow Chart for Output 2 42
Figure 3.11 Flow Chart for Ramp and Soak 45
Figure 3.12 Flow Chart for ID Code 47
Figure 3.13 Flow Chart for Communication Option 49
Figure 3.14 Flow Chart for Display Color Selection 55

LIST OF TABLES:

Table 2.1 Front Panel Annunciators 5
Table 2.2 Rear Panel Connector 6
Table 2.3 Fuse Requirement 7
Table 2.4 TC Wire Color Chart 8
Table 3.1 Button Function in Configuration Mode 14
Table 3.2 Conversion Table 24
Table 4.1 Input Properties 61
Table 5.1 Factory Preset Values 62

NOTES, WARNINGS and CAUTIONS

Information that is especially important to note is identified by following labels:

- **NOTE**
- **WARNING or CAUTION**
- **IMPORTANT**
- **TIP**

NOTE: Provides you with information that is important to successfully setup and use the Programmable Digital Meter.

CAUTION or WARNING: Tells you about the risk of electrical shock.

CAUTION, WARNING or IMPORTANT: Tells you of circumstances or practices that can effect the instrument's functionality and must refer to accompanying documents.

TIP: Provides you helpful hints.

PART 1
INTRODUCTION
1.1 Description

Note This device can be purchased as monitor (read process value only) or as a controller.

- The iSeries controller offers unparalleled flexibility in process measurement. Each unit allows the user to select the input type, from 10 thermocouple types (J, K, T, E, R, S, B, C, N and J DIN), Pt RTDs (100, 500 or 1000 Ω, with either 385 or 392 curve), DC voltage, or DC current. The voltage/current inputs are fully scalable to virtually all engineering units, with selectable decimal point, perfect for use with pressure, flow or other process input.

- The temperature control can be achieved by using on/off or PID heat/cool control strategy. Control can be optimized with an auto tune feature. The instrument offers a ramp to setpoint with timed soak period before switching off the output.

- The iSeries device features a large, three color programmable display with capability to change a color every time the Alarm is triggered. The standard features include dual outputs with relay, SSR, dc pulse, analog voltage or current. Options include programmable RS-232 or RS-485 serial communication and excitation. Analog Output is fully scalable and may be configured as a proportional controller or retransmission to follow your display. Universal power supply accepts 90 to 240 Vac. Low voltage power option accepts 24 Vac or 12 to 36 Vdc.

1.2 Safety Considerations

This device is marked with the international caution symbol. It is important to read this manual before installing or commissioning this device as it contains important information relating to Safety and EMC (Electromagnetic Compatibility).

This instrument is a panel mount device protected in accordance with EN 61010-1:2001, electrical safety requirements for electrical equipment for measurement, control and laboratory. Installation of this instrument should be done by qualified personnel. In order to ensure safe operation, the following instructions should be followed.

This instrument has no power-on switch. An external switch or circuit-breaker shall be included in the building installation as a disconnecting device. It shall be marked to indicate this function, and it shall be in close proximity to the equipment within easy reach of the operator. The switch or circuit-breaker shall meet the relevant requirements of IEC 947–1 and IEC 947-3 (International Electrotechnical Commission). The switch shall not be incorporated in the main supply cord.

Furthermore, to provide protection against excessive energy being drawn from the main supply in case of a fault in the equipment, an overcurrent protection device shall be installed.

Note

- Do not exceed voltage rating on the label located on the top of the instrument housing.
- Always disconnect power before changing signal and power connections.
- Do not use this instrument on a work bench without its case for safety reasons.
- Do not operate this instrument in flammable or explosive atmospheres.
- Do not expose this instrument to rain or moisture.
- Unit mounting should allow for adequate ventilation to ensure instrument does not exceed operating temperature rating.
- Use electrical wires with adequate size to handle mechanical strain and power requirements. Install without exposing bare wire outside the connector to minimize electrical shock hazards.

EMC Considerations

- Whenever EMC is an issue, always use shielded cables.
- Never run signal and power wires in the same conduit.
- Use signal wire connections with twisted-pair cables.
- Install Ferrite Bead(s) on signal wires close to the instrument if EMC problems persist.

Failure to follow all instructions and warnings may result in injury!

1.3 Before You Begin

Inspecting Your Shipment:

Remove the packing slip and verify that you have received everything listed. Inspect the container and equipment for signs of damage as soon as you receive the shipment. Note any evidence of rough handling in transit. Immediately report any damage to the shipping agent. The carrier will not honor damage claims unless all shipping material is saved for inspection. After examining and removing the contents, save the packing material and carton in the event reshipment is necessary.

Customer Service:

If you need assistance, please call the nearest Customer Service Department, listed in this manual.

Manuals, Software:

The latest Operation and Communication Manual as well as free configuration software and ActiveX controls are available from **the website listed in this manual or on the CD-ROM enclosed with your shipment**.

Tip ☞ For first-time users: Refer to the QuickStart Manual for basic operation and set-up instructions.

Tip ☞ If you have the Serial Communications/Ethernet Option you can easily configure the controller on your computer or on-line.

To Disable Outputs:

To ensure that menu changes are properly stored, Standby Mode should be used during setup of the instrument. During Standby Mode, the instrument remains in a ready condition, but all outputs are disabled. Standby Mode is useful when maintenence of the system is necessary.

When the instrument is in "RUN" Mode, **push ◶ twice** to disable all outputs and alarms. It is now in "STANDBY" Mode. **Push ◶ once** more to resume "RUN" Mode.

Tip ☞ **PUSH ◶ TWICE** to disable the system during an **EMERGENCY**.

To Reset the Meter:

When the controller is in the "MENU" Mode, **push ▼ once** to direct controller one step backward of the top menu item.

Push ▼ twice to reset controller, prior to resuming "Run" Mode except after "Alarms", that will go to the "Run" Mode without resetting the controller.

PART 2
SETUP
2.1 Front Panel

Note: Refer to the Quick Start Guide for assembly and disassembly instructions.

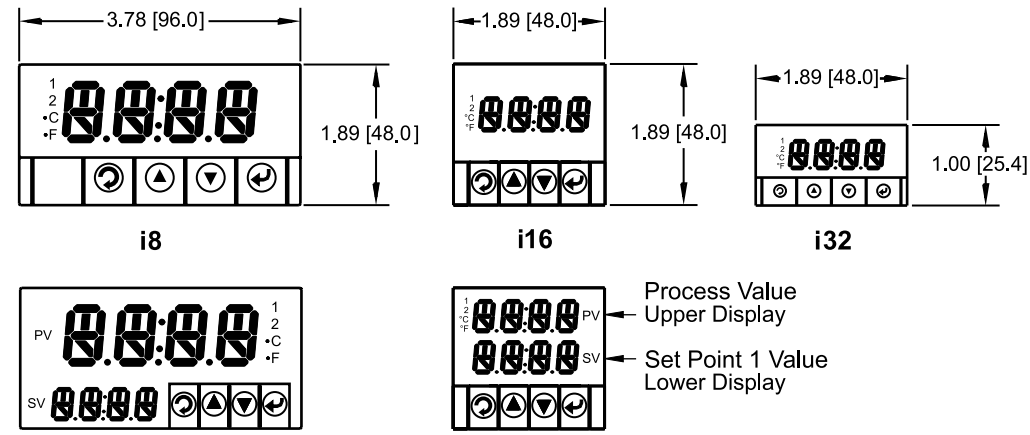

Figure 2.1 Front Panel Display

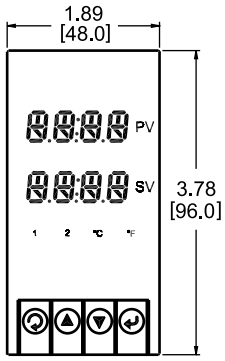

i8DV DUAL VERTICAL DISPLAY

Table 2.1 Front Panel Annunciators

1	Output 1/Setpoint 1/ Alarm 1 indicator
2	Output 2/Setpoint 2/ Alarm 2 indicator
°C	°C unit indicator
°F	°F unit indicator
PV	Upper Display shows the Process Value
SV	Lower Display shows the Setpoint 1 Value
	Changes display to Configuration Mode and advances through menu items*
	Used in Program Mode and Peak Recall*
	Used in Program Mode and Valley Recall*
	Accesses submenus in Configuration Mode and stores selected values*

* See Part 3 Operation: Configuration Mode

The Dual Display model allows the user to observe the Process Value (upper display) and Setpoint 1 Value (lower display) at the same time.

2.2 Rear Panel Connections

The rear panel connections are shown in Figures 2.2 and 2.3.

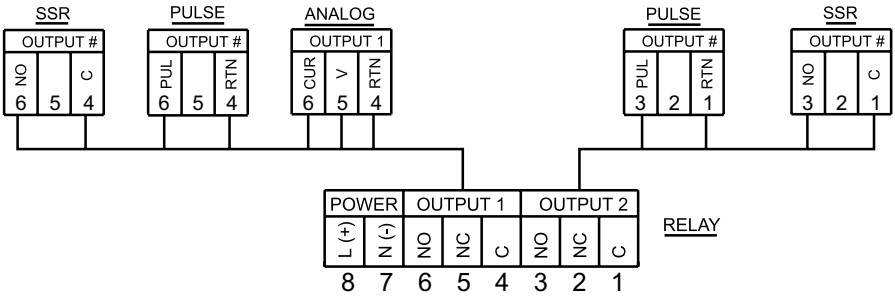

Figure 2.2 Rear Panel Power and Output Connections

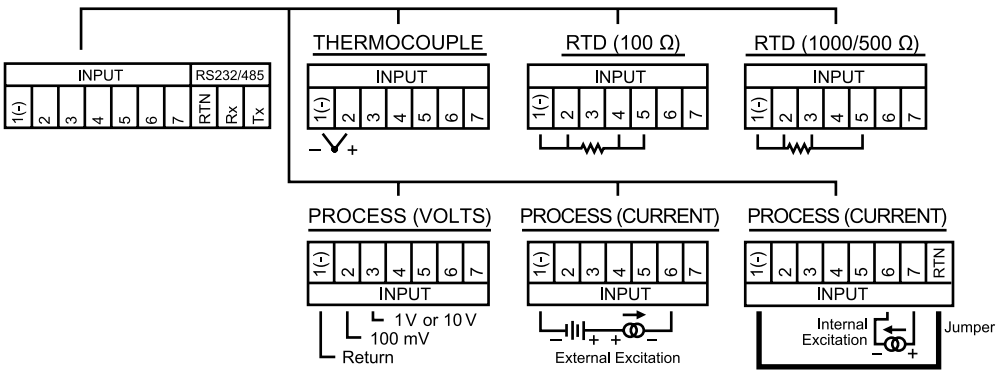

Figure 2.3 Rear Panel Input Connections

Table 2.2 Rear Panel Connector

POWER	AC/DC Power Connector: All models
INPUT	Input Connector: All models TC, PR (Process), RTD
OUTPUT 1	Based on one of the following models: Relay SPDT Solid State Relay Pulse Analog Output (Voltage and Current)
OUTPUT 2	Based on one of the following models: Relay SPDT Solid State Relay Pulse
OPTION	Based on one of the following models: RS-232C or RS-485 programmable Excitation

2.3 Electrical Installation

2.3.1 Power Connections

Caution: Do not connect power to your device until you have completed all input and output connections. Failure to do so may result in injury!

Connect the main power connections as shown in Figure 2.4.

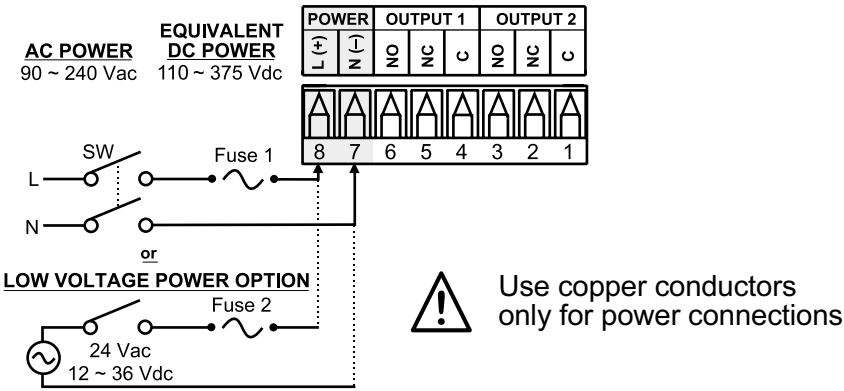

Figure 2.4 Main Power Connections

Table 2.3 Fuse Requirement (see specifications)

FUSE	Connector	Output Type	For 115Vac	For 230Vac	DC
FUSE 1	Power	N/A	100 mA(T)	100 mA(T)	100 mA(T)
FUSE 2	Power	N/A	N/A	N/A	400 mA(T)

For the low voltage power option, in order to maintain the same degree of protection as the standard high voltage input power units (90 - 240 Vac), always use a Safety Agency Approved DC or AC source with the same Overvoltage Category and pollution degree as the standard AC unit (90 - 240 Vac).

Note

The Safety European Standard EN61010-1 for measurement, control, and laboratory equipment requires that fuses must be specified based on IEC127. This standard specifies for a Time-lag fuse, the letter code “T”. The above recommended fuses are of the type IEC127-2-sheet III. Be aware that there are significant differences between the requirements listed in the UL 248-14/CSA 248.14 and the IEC 127 fuse standards. As a result, no single fuse can carry all approval listings. A 1.0 Amp IEC fuse is approximately equivalent to a 1.4 Amp UL/CSA fuse. It is advised to consult the manufacturer’s data sheets for a cross-reference.

2.3.2 Thermocouple

The figure below shows the wiring hookup for any thermocouple type. For example, for Type K hookup, connect the yellow wire to the "2" terminal and the red wire to the "1(-)" terminal.

When configuring your controller, select Thermocouple and Thermocouple Type in the Input Type menu (see Part 3).

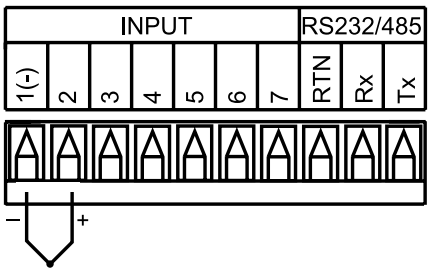

Figure 2.5 Thermocouple Wiring Hookup

Table 2.4 TC Wire Color Chart

TYPE	Input Connector		Jacket (external insulation)	
	Terminal 1 (-)	Terminal 2 (+)	Extension	Grade
J	Red	White	dark-Brown	Black
K	Red	Yellow	dark-Brown	Yellow
T	Red	Blue	dark-Brown	Blue
E	Red	Purple	dark-Brown	Purple
N	Red	Orange	dark-Brown	Brown
R	Red	Black	-	Green
S	Red	Black	-	Green
B	Red	Gray	-	Black

2.3.3 Two/Three/Four-Wire RTD

The figures below show the input connections and input connector jumpers (shown in bold lines) required to hookup a 2-, 3- or 4-wire RTD.

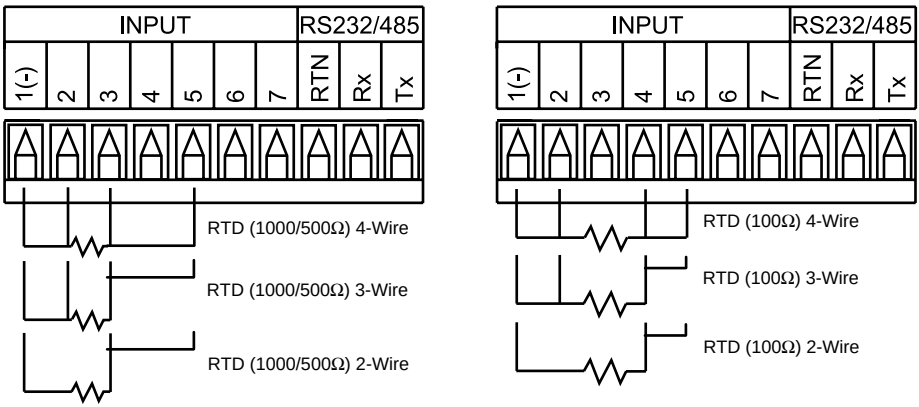

Figure 2.6 a) RTD-1000 ohm and 500 ohm Wiring Hookup **b) RTD-100 ohm Wiring Hookup**

The **two-wire** connection is simplest method, but does not compensate for lead-wire temperature change and often requires calibration to cancel lead-wire resistance offset.

The **three-wire** connection works best with RTD leads closely equal in resistance. The device measures the RTD, plus upper and lower lead drop voltage and the subtracts twice the measured drop in the lower supply current lead producing excellent lead-resistance cancellation for balanced measurements.

The **four-wire** RTD hookup is applicable to unbalanced lead resistance and enables the device to measure and subtract the lead voltage, which produces the best lead-resistance cancellation.

When configuring your controller, select RTD type and RTD value in the Input Type menu (see Part 3).

Note If the input wires of the meter get disconnected or broken, it will display I-OPN "Input (+) Open" message except in case of 500/1000 Ω 2-wire RTD. In this case the display shows -OPN "Input (-) Open" message. For safety purpose you may want to set up your alarm to be triggered when input is open. See Alarm 1 & 2 chapters for details.

2.3.4 Process Current

The figure below shows the wiring hookup for Process Current 0 – 20 mA.

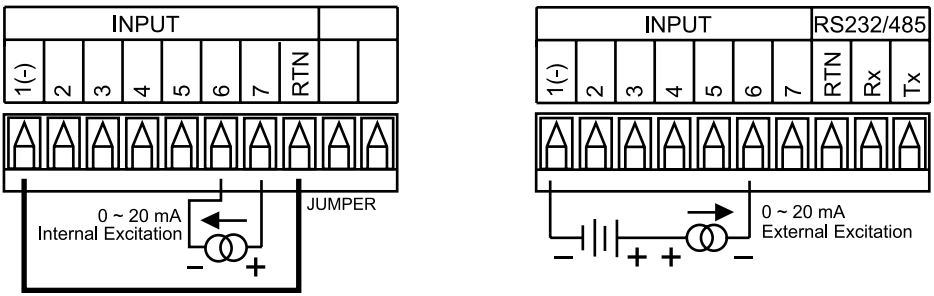

Figure 2.7 Process Current Wiring Hookup (Internal and External Excitation)

When configuring your instrument, select Process Type in the Input Type Menu (see Part 3).

2.3.5 Process Voltage

The figure below shows the wiring hookup for Process Voltage 0 – 100 mV, 0 – 1 V, 0 – 10 V.

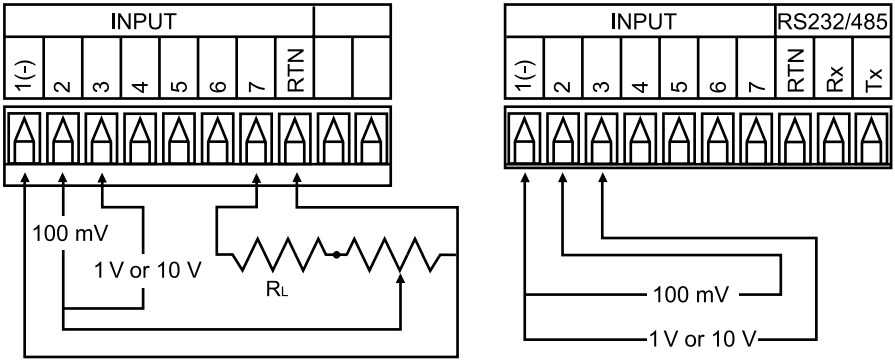

Figure 2.8
a) Process Voltage Wiring Hookup with Sensor Excitation
b) Process Voltage Wiring Hookup without Sensor Excitation

R_L - Voltage limited resistor, which allows to convert 24 Vdc internal excitation voltage to the appropriate process input value. For instance: if the potentiometer value is equal to 10 kΩ, the minimum R_L is 14 kΩ for 10 V process input.

When configuring your instrument, select Process Type in the Input Type Menu (see Part 3).

2.3.6 Wiring Outputs

This meter has two factory installed outputs. The SPDT Mechanical Relay, SPST Solid State Relay, Pulse and Analog Output Connection are shown below.

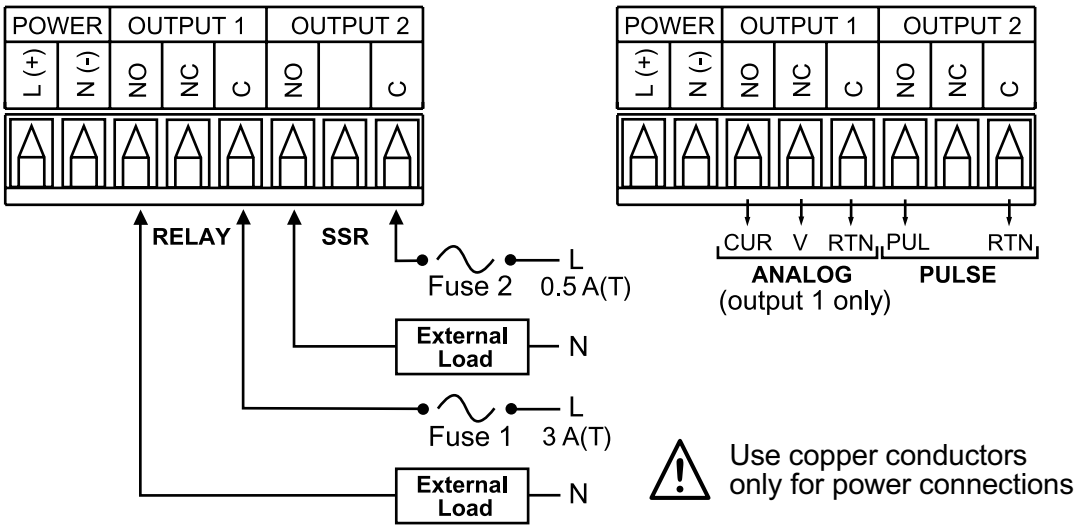

Figure 2.9
a) Mechanical Relay and SSR Outputs Wiring Hookup
b) Pulse and Analog Outputs Wiring Hookup

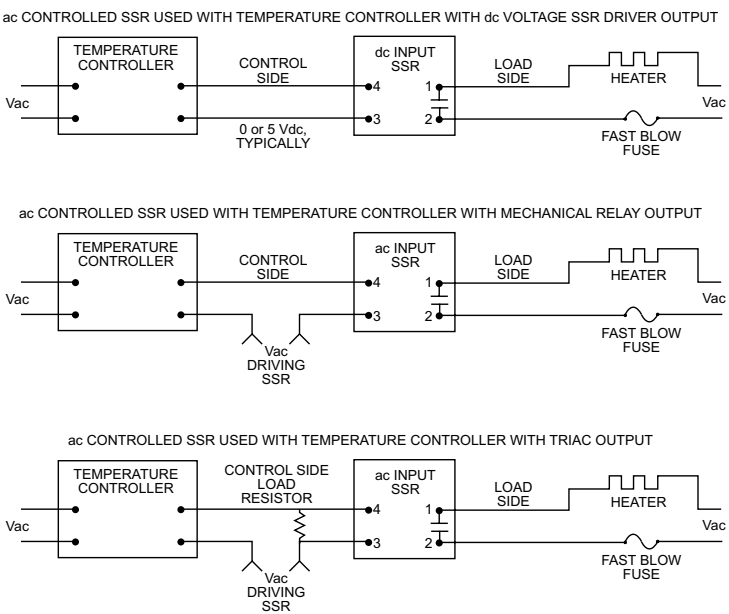

Figure 2.10 Typical Applications

This device may have a programmable communication output. The RS-232 and RS-485 Output Connection are shown below.

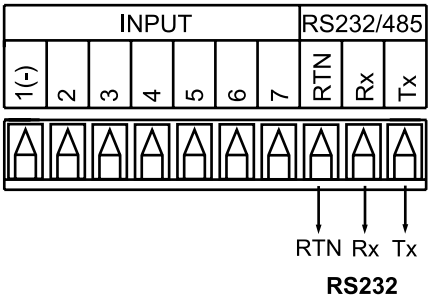

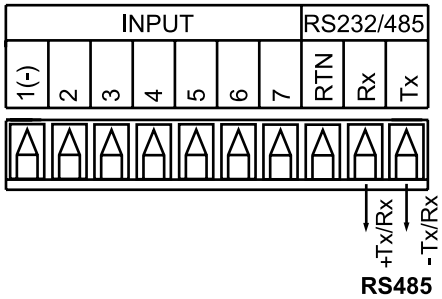

Figure 2.11
a) RS-232 Output Wiring Hookup b) RS-485 Output Wiring Hookup

This device may also have an excitation output.

Note ☞ If the Dual Display model has a Low Voltage power supply option, then excitation is not available.

Note ☞ Excitation is not available if communication option is installed.

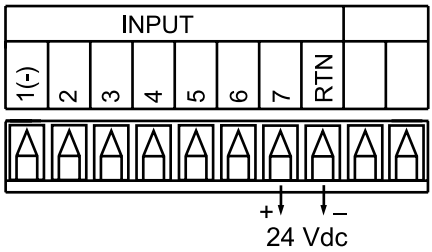

Figure 2.12 Excitation Output

This device has snubber circuits designed to protect the contacts of the mechanical relays when it switches to inductive loads (i.e. solenoids, relays). These snubbers are internally connected between the Common (C) and Normally Open (NO) relay contacts of Output 1 and Output 2.

Note ☞ If you have an inductive load connected between Common (C) and Normally Closed (NC) contacts of the mechanical relays and you want to protect them from the rush current during the switching period, you have to connect an external snubber circuit between Common (C) and Normally Closed (NC) contacts as indicated in Figure 2.13.

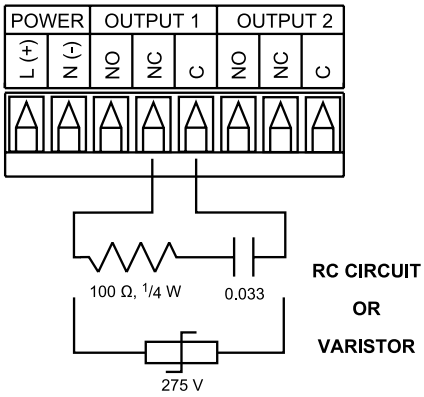

Figure 2.13
Snubber Circuits Wiring Hookup

2.3.7 Dual Display Color Setup

The dual display option allows the user to change the color of the upper and lower displays.

Note To change the color of the upper display, see **Section 3.2.15** (Display Color section).

To change the color of the lower display follow the instructions below:
The unit should be removed from the panel and opened.

Note Refer to the Quick Start Guide for assembly and disassembly instructions.

The S1 jumper is located on the back side of the display board.
The location of S1 and pin selection jumpers are shown below.

Use a jumper for GREEN or RED, never leave S1 open.

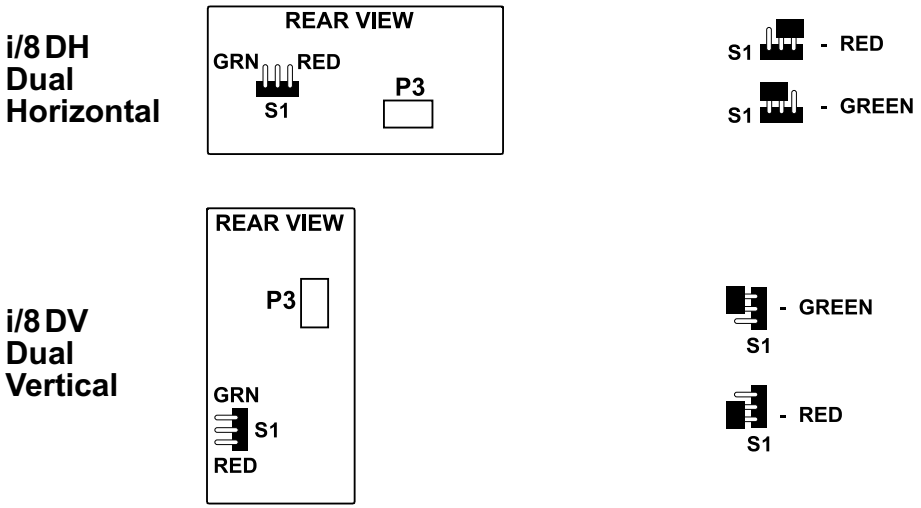

Figure 2.14 i/8 D Location of S1 and Selectable Jumper Positions

Figure 2.15 i/16D Location of S1 and Selectable Jumper Positions

PART 3
OPERATION: Configuration Mode
3.1 Introduction

The instrument has two different modes of operation. The first, Run Mode, is used to display values for the Process Variable, and to display or clear Peak and Valley values. The other mode, Menu Configuration Mode, is used to navigate through the menu options and configure the controller. Part 3 of this manual will explain the Menu Configuration Mode. For your instrument to operate properly, the user must first "program" or configure the menu options.

Turning your Controller On for the First Time

The device becomes active as soon as it is connected to a power source. It has no On or Off switch. The device at first momentarily shows the software version number, followed by reset RSt, and then proceeds to the Run Mode.

Tip ☞ For first-time users: Refer to the QuickStart Manual for basic operation and set-up instructions.

Tip ☞ If you have the Serial Communications/Ethernet Option you can easily configure the controller on your computer or on-line.

Table 3.1 Button Function in Configuration Mode

MENU	• To enter the Menu, the user must first press button. • Use this button to advance/navigate to the next menu item. The user can navigate through all the top level menus by pressing . • While a parameter is being modified, press to escape without saving the parameter.
(UP)	• Press the up button to scroll through “flashing” selections. When a numerical value is displayed press this key to increase value of a parameter that is currently being modified. • Holding the button down for approximately 3 seconds will speed up the rate at which the set point value increments. • In the Run Mode press causes the display to flash the PEAK value – press again to return to the Run Mode.
(DOWN)	• Press the down button to go back to a previous Top Level Menu item. • Press this button twice to reset the controller to the Run Mode. • When a numerical value is flashing (except set point value) press to scroll digits from left to right allowing the user to select the desired digit to modify. • When a setpoint value is displayed press to decrease value of a setpoint that is currently being modified. Holding the button down for approximately 3 seconds will speed up the rate at which the setpoint value is decremented. • In the Run Mode press causes the display to flash the VALLEY value – press again to return to the Run Mode.
ENTER	• Press the enter button to access the submenus from a Top Level Menu item. • Press to store a submenu selection or after entering a value — the display will flash a StRd message to confirm your selection. • To reset flashing Peak or Valley press . • In the Run Mode, press twice to enable Standby Mode with flashing StbY.

Note ☞ **Reset:** Except for Alarms, modifying any settings of the menu configuration will reset the instrument prior to resuming Run Mode.

3.2 Menu Configuration

Note It is required that you put the controller in the Standby Mode for any configuration change other than Setpoints & Alarms.

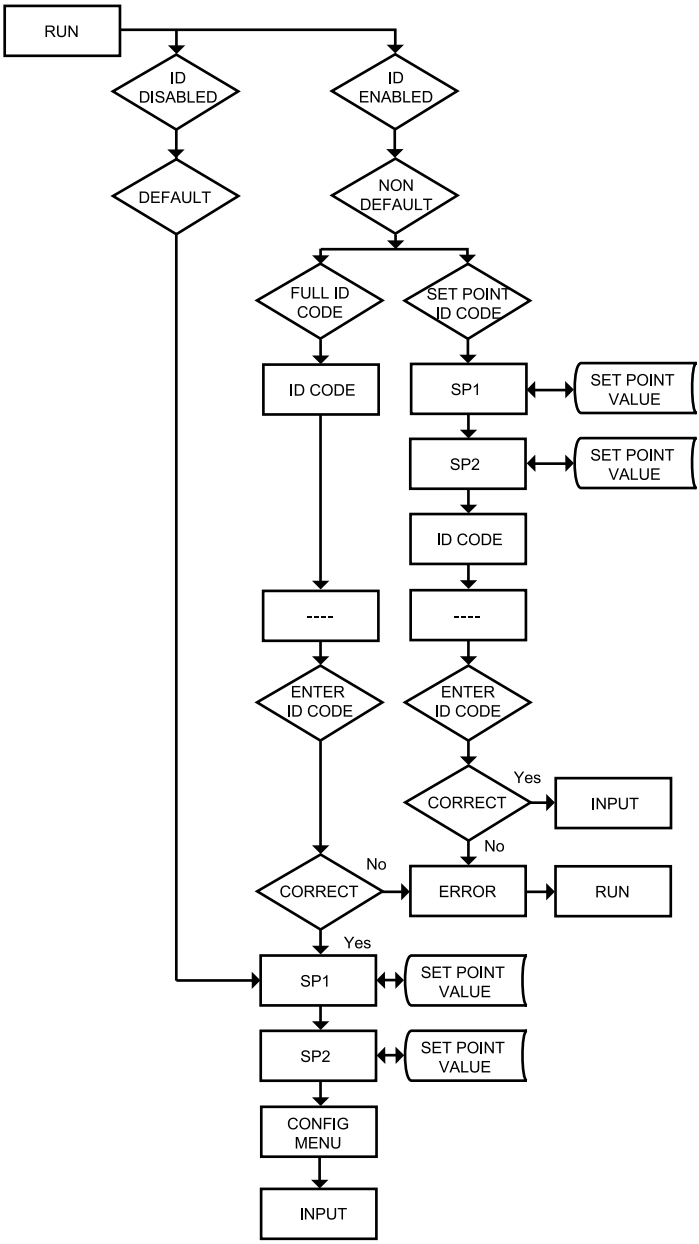

Figure 3.1 Flow Chart for ID and Setpoints

3.2.1 ID Number

SEE ID MENU SELECTION IN CONFIGURATION SECTION FOR ENABLE/DISABLE OR CHANGE ID CODE.

Note ☞ If ID Code is **Disabled** or set as **Default** (0000) the menu will skip ID step to Setpoint Menu.

If ID Code is set to **Full** Security Level and user attempts to enter the Main Menu, they will be prompted for an ID Code.

If ID Code is set to **Setpoint/ID** Security Level and user attempts to enter the Configuration Menu, they will be prompted for an ID Code.

ENTERING YOUR NON-DEFAULT FULL SECURITY ID NUMBER.

Press ⊙	**1)** Display shows Id.
Press ⊙	**2)** Display advances to ____.
Press ▲ & ▼	**3)** Press ▲ to increase digit 0-9. Press ▼ to activate next digit (flashing). Continue to use ▲ and ▼ to enter your 4-digit ID code.
Press ⊙	**4)** If the correct ID code is entered, the menu will advance to the Setpoint 1 Menu, otherwise an error message ERRo will be displayed and the instrument will return to the Run Mode.

Note ☞ To change ID Code, see ID Menu in the Configuration section.

ENTERING YOUR NON-DEFAULT SETPOINT/ID SECURITY ID NUMBER.

Press ⊙	**5)** Display shows SP1 Setpoint 1 Menu.
Press ⊙	**6)** Display shows SP2 Setpoint 2 Menu.
Press ⊙	**7)** Display shows Id ID Code Menu.
Press ⊙	**8)** Display advances to ____.
Press ▲ & ▼	**9)** Use ▲ and ▼ to change your ID Code.
Press ⊙	**10)** If correct ID Code is entered, the display will advance to the INPt Input Menu, otherwise the error message ERRo will be displayed and the controller will return to the Run Mode.

Note ☞ To prevent unauthorized tampering with the setup parameters, the instrument provides protection by requiring the user to enter the ID Code before allowing access to subsequent menus. If the ID Code entered does not match the ID Code stored, the controller responds with an error message and access to subsequent menus will be denied.

Tip ☞ Use numbers that are easy for you to remember. If the ID Code is forgotten or lost, call customer service with your serial number to access and reset the default to 0000.

3.2.2 Set Points

SETPOINT 1:

Press ⊙	**1)** Press ⊙, if necessary until SP 1 prompt appears.
Press ⊙	**2)** Display shows previous value of “Setpoint 1”.
Press ▲ & ▼	**3)** Press ▲ and ▼ to increase or decrease Setpoint 1 respectively.

Note Holding ▲ & ▼ buttons down for approximately 3 seconds will speed up the rate at which the Setpoint value increments or decrements.

Press ▲ & ▼	**4)** Continue to use ▲ and ▼ to enter your 4-digit Setpoint 1 value.
Press ⊙	**5)** Display shows StRd stored message momentarily and then advances to SP2 only, if a change was made, otherwise press ⊙ to advance to SP2 Setpoint 2 Menu.

SETPOINT 2:

Press ⊙	**6)** Display shows previous value of “Setpoint 2”.
Press ▲ & ▼	**7)** Press ▲ and ▼ to increase or decrease Setpoint 2 respectively.

Note Holding ▲ & ▼ buttons down for approximately 3 seconds will speed up the rate at which the setpoint value increments or decrements.

Press ⊙	**8)** Display shows StRd stored message momentarily and then advances to CNFG only, if a change was made, otherwise press ⊙ to advance to CNFG Configuration Menu.

3.2.3 Configuration Menu

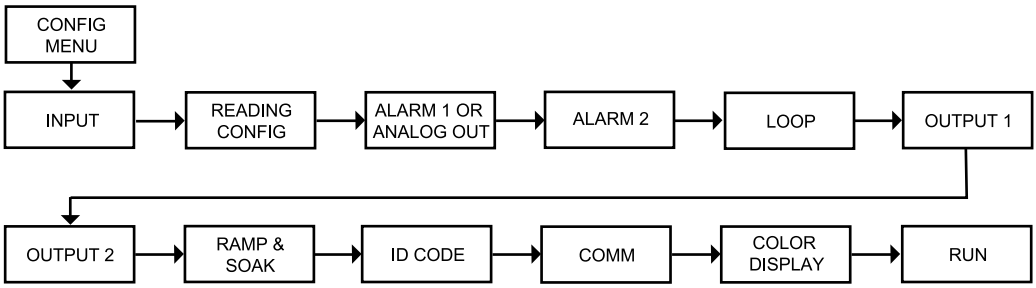

Figure 3.2 Flow Chart for Configuration Menu

Enter Configuration Menu:

Press ⊛ **1)** Press ⊛, if necessary, until CNFG prompt appear.
Press ⊛ **2)** Display advances to INPt Input Menu.
Press ⊛ **3)** Pressing and releasing ⊛ to scroll through all available menus of Configuration section.

3.2.4 Input Type Menu

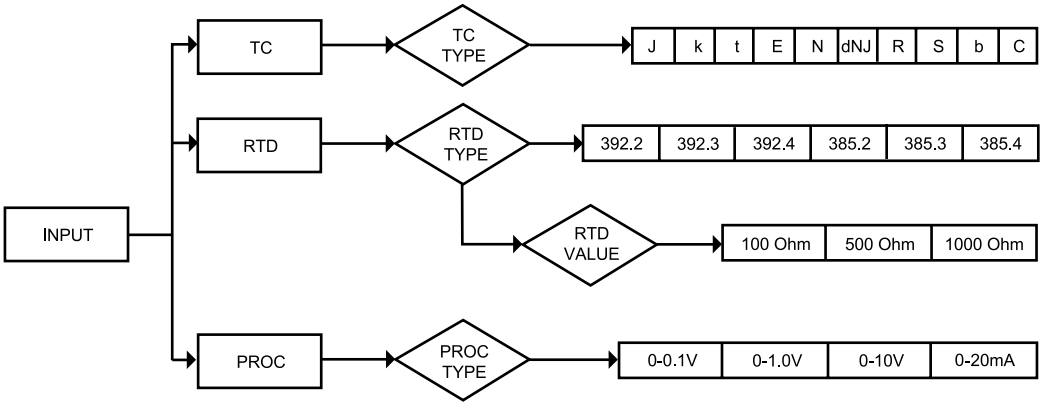

Figure 3.3 Flow Chart for Input Type Menu

Input Type (Thermocouple)

ENTER INPUT TYPE MENU:

Press ⟲	**1)** Press ⟲, if necessary, until CNFG prompt appears.
Press ⏎	**2)** Display advances to INPt Input Menu.
Press ⏎	**3)** Display flashes t.c, Rtd or PROC (Thermocouple, RTD or Process). If the displayed input type is t.c, press ⟲ to skip to step 6 (t.c stops flashing).

THERMOCOUPLE SUBMENU:

Press ▲	**4)** Scroll through the available selection to t.c (flashing).
Press ⏎	**5)** Display shows StRd stored message momentarily and then t.c (not flashing).
Press ⏎	**6)** Display flashes previous thermocouple type selection. i.e. J (see below for types).
Press ▲	**7)** Scroll through the available thermocouple types to the selection of your choice.
Press ⏎	**8)** Display shows StRd stored message momentarily and then advances to the RdG Reading Configuration Menu.

Note Use the Input Type (Thermocouple) (RTD) or (Process) and verify your Electrical Installation (see section 2.3).

Thermocouple Types:	J,	K,	T,	E,	N,	DIN J,	R,	S,	B,	C
Display:	J	K	t	E	N	dNJ	R	S	b	C

Input Type (RTD)

ENTER INPUT TYPE MENU:

Press ⊙ **1)** Press ⊙, if necessary, until CNFG prompt appears.
Press ⊙ **2)** Display advances to INPt Input Menu.
Press ⊙ **3)** Display flashes t.c, Rtd or PROC (Thermocouple, RTD or Process). If the displayed input type is Rtd, press ⊙ to skip to step 6 (Rtd stops flashing).

RTD SUBMENU:

Press ▲ **4)** Scroll through the available selection to Rtd (flashing).
Press ⊙ **5)** Display shows StRd stored message momentarily and then Rtd (not flashing).
Press ⊙ **6)** Display flashes previous RTD type selection i.e. 392.2 (see below for RTD types selection).
Press ▲ **7)** Scroll through the available RTD types to the selection of your choice.
Press ⊙ **8)** Display shows StRd stored message momentarily and then advances to Rtd RTD value.

RTD Types: 392 385 Two, Three or Four-wire
Display: 392.2, 392.3, 392.4, 385.2, 385.3, 385.4

Note Last digit indicates: 2-, 3- or 4-wire input.

RTD VALUE SUBMENU:

Press ⊙ **9)** Display flashes previous RTD value selection i.e. 100_ (see below for RTD value selection).
Press ▲ **10)** Scroll through the available RTD values to the selection of your choice.
Press ⊙ **11)** Display shows StRd stored message momentarily and then advances to RdC Reading Configuration Menu.

RTD Values: 100 ohm 500 ohm 1000 ohm
Display: 100_ 500_ 1000

Input Type (Process)

ENTER INPUT TYPE MENU:

Press ⊙ **1)** Press ⊙, if necessary, until CNFG prompt appears.
Press ⊙ **2)** Display advances to INPt Input Menu.
Press ⊙ **3)** Display flashes t.c, Rtd or PROC (Thermocouple, RTD or Process). If the displayed input type is PROC, press ⊙ to skip to step 6 (PROC stops flashing).

PROCESS SUBMENU:

Press ▲ **4)** Scroll through the available selection to PROC (flashing).
Press ⊙ **5)** Display shows StRd stored message momentarily and then PROC (not flashing).
Press ⊙ **6)** Display flashes previous Process type selection. i.e. 0-10 (see below for Process types selection).
Press ▲ **7)** Scroll through the available Process types to the selection of your choice.
Press ⊙ **8)** Display shows StRd stored message and then advances to RdG Reading Configuration Menu.

Process Types:	100 mV	1 V	10 V	0 – 20 mA
Display:	0-0.1	0-1.0	0-10	0-20

For 4-20 mA Input select 0-20 mA then adjust the Input/Reading accordingly. To adjust 4-20 mA input, see example under INPUT/READING submenu. The factory preset value is 4-20 mA.

3.2.5 Reading Configuration

Note It is required that you put the controller in the Standby Mode for any configuration change other than Set Points & Alarms.

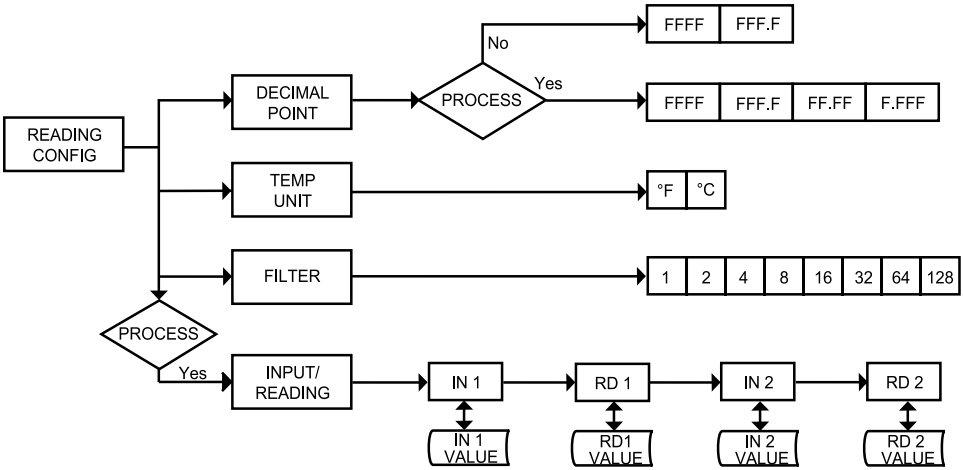

Figure 3.4 Flow Chart for Reading Configuration Menu

ENTER READING CONFIGURATION MENU:

Press ⊙ **1)** Press ⊙, if necessary, until CNFG prompt appears.
Press ⊙ **2)** Display advances to INPt Input Menu.
Press ⊙ **3)** Display advances to RdG Reading Configuration Menu.
Press ⊙ **4)** Display advances to dEC Decimal Point.

DECIMAL POINT SUBMENU:

Press ⊙ **5)** Display flashes previous selection for Decimal location.
Press ▲ **6)** Scroll though the available selections and choose Decimal location: FFFF or FFF.F (also FF.FF and F.FFF — if PROC Process type was selected in the Input Type Menu).
Press ⊙ **7)** Display shows StRd stored message momentarily and then advances to tEMP Temperature Unit.

Note ☞ Decimal Point for Process Input Type is passive.

TEMPERATURE UNIT SUBMENU:

Press ⊙ **8)** Display flashes previous Temperature Unit selection.
Press ▲ **9)** Scroll though the available selections to the Temperature Unit of your choice: °F or °C.
Press ⊙ **10)** Display shows StRd stored message momentarily and then advances to FLtR Filter Constant.

FILTER CONSTANT SUBMENU:

Press ⊙ **11)** Display flashes previous selection for Filter Constant.
Press ▲ **12)** Scroll though the available selections:
0001, 0002, 0004, 0008, 0016, 0032, 0064, 0128
Press ⊙ **13)** Display shows StRd stored message momentarily only, if change was made, otherwise press ⊙ to advance to the next menu.

Note ☞ If Process was selected in the Input Type Menu the display will advance to IN.Rd Input/Reading Submenu, otherwise the display advances to the ALR1 Alarm 1 Menu.

The Filter Constant Submenu allows the user to specify the number of readings stored in the Digital Averaging Filter.

Tip ☞ For PID control select filter value 0001-0004. A filter value of 2 is approximately equal to 1 second RC low pass time constant.

Reading Configuration (If Process was selected)

INPUT/READING (SCALE AND OFFSET) SUBMENU:

Input Voltage or Current can be converted or scaled into values appropriate for the process or signal being measured. So, a reading may be displayed, for example, in units of weight or velocity instead of in amperes or volts.

The instrument determines Scale and Offset values based on two user-provided input values entered with the corresponding readings. Note that “In1” Input 1 and “In2” Input 2 are represented and entered as a product of the input voltage/current and the conversion number from the Table 3.1.

Note The following instructions include details for a specific scenario in which a 4-20 mA input (in the 20 mA Process Mode) is to be represented as a measurement of 0-100 percent.

Press ⏎	**14)** Press ⏎ at the IN.Rd prompt. Display shows IN 1 Input 1 submenu.
Press ⏎	**15)** Display shows Input 1 value with 1st digit flashing.
Press ▲ & ▼	**16)** Use ▲ and ▼ buttons to enter IN 1 value. The IN 1 value = min. input value * conversion number.
	Note Disregard the position of the decimal point (2000 counts may actually appear as “200.0”, “20.00”, or “2.000”). Example: 4 mA as 4(mA) x 500 = 2000.
Press ⏎	**17)** Display advances to Rd 1 Reading 1 Submenu.
Press ▲ & ▼	**18)** Use ▲ and ▼ buttons to enter Rd 1 value. This value represents IN 1 in terms of some meaningful engineering units. To show the 4 mA as zero percent enter Rd 1 value = 0000. Example: Rd 1 value = 0000.
Press ⏎	**19)** Display IN 2 Input 2 Submenu.
Press ⏎	**20)** Display shows Input 2 value with 1st digit flashing. The IN 2 value = max. input value * conversion number. Example: 20(mA) x 500 = 10000 (9999).
Press ▲ & ▼	**21)** Use ▲ and ▼ buttons to enter IN 2 value.
Press ⏎	**22)** Display advances to Rd 2 Reading 2 Submenu.
Press ▲ & ▼	**23)** Use ▲ and ▼ buttons to enter Rd 2 value. Example: Rd 2 value = 0100.
Press ⏎	**24)** Display flashes StRd stored message momentarily and then advances to ALR 1 only, if change was made, otherwise press ⏎ to advance to ALR 1 Alarm 1 Menu.

Tip

Conversion number is a coefficient of conversion between input values and real full display range (10000 counts shown as 9999). See Table 3.2 below for proper conversion number.

Table 3.2 Conversion Table

RANGE	CONVERSION NUMBER
100 mV	10000 / (100 x 1) = 100
1 V	10000 / (1000 x 1) = 10
10 V	10000 / (1000 x 10) = 1
0 -20 mA	10000 / (20 x 1) = 500

Example =
0 - 1 V = 0 - 100.0
In 1 = 0
Rd 1 = 0
Inp 2 = 9999
Rd 2 = 100.0

3.2.6 Alarm 1

This unit is equipped with two physical outputs that can only be configured as follows: **Alarm 1 & Alarm 2, Alarm 1 & Output 2, Output 1 & Alarm 2, Output 1 & Output 2, Analog Out 1 & Alarm 2, Analog Out 1 & Output 2**. Analog Out available only if Analog Output Option board is factory installed.

Note If Analog Output Option is installed, the controller will skip Alarm 1 Menu item to Analog Output.

Note Alarm must be DISABLED if Ramp is ENABLED.

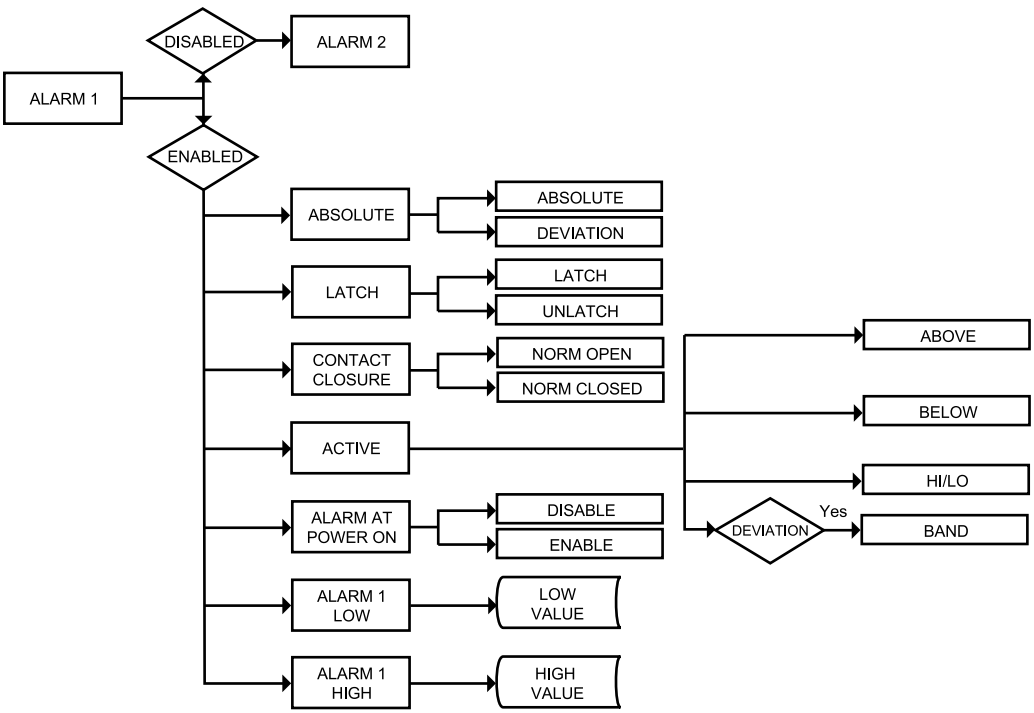

Figure 3.5 Flow Chart for Alarm 1

ENTER ALARM 1 MENU:

Press ⊙ **1)** Press ⊙, if necessary, until CNFG prompt appears.
Press ⊙ **2)** Display advances to INPt Input Menu.
Press ⊙ **3)** Press ⊙, if necessary, until Display advances to ALR1 Alarm 1 Menu.
Press ⊙ **4)** Display advances to Alarm 1 EN6L Enable or dS6L Disable Submenu and flashes the previous selection.

ALARM 1 ENABLE/DISABLE SUBMENU:

Press ▲ **5)** Scroll though the available selection until EnbL displays to use Alarm 1.

Press ⊙ **6)** Display shows StRd stored message momentarily and then advances to AbSo only if it was changed, otherwise press ⊙ to advance to AbSo Alarm 1 Absolute/Deviation Submenu.

Note: If dSbL Alarm 1 **Disabled** was selected, all submenus of Alarm 1 Menu will be skipped and meter advances to AlR2 Alarm 2 Menu. If EnbL Alarm 1 **Enabled** was selected, Output 1 would be automatically Disabled, and reassigned as Alarm 1.

ALARM 1 ABSOLUTE/DEVIATION SUBMENU:

Press ⊙ **7)** Display flashes previous selection. Press ▲ to AbSo Absolute or dEV Deviation.

Press ⊙ **8)** Display shows StRd stored message momentarily and then advances to LtcH only if it was changed, otherwise press ⊙ to advance to LtcH Alarm 1 Latch/Unlatch Submenu.

Absolute Mode allows Alarm 1 to function independently from Setpoint 1. If the process being monitored does not change often, then "Absolute" Mode is recommended.

Deviation Mode allows changes to Setpoint 1 to be made automatically to Alarm 1. Deviation mode is typically the ideal mode if the process temperature changes often. In Deviation Mode, set Alarm 1 a certain number of degrees or counts away from Setpoint 1 — this relation remains fixed even if Setpoint 1 is changed.

ALARM 1 LATCH/UNLATCH SUBMENU:

Press ⊙ **9)** Display flashes previous selection. Press ▲ to LtcH Latched or UnLt Unlatched.

Press ⊙ **10)** Display shows StRd stored message momentarily and then advances to Ct.CL only, if it was changed, otherwise press ⊙ to advance to Ct.CL Contact Closure Submenu.

Latched Mode: Relay remains "latched" until reset. To reset already latched alarm, select Alarm Latch and press Max twice (i.e. Unlatch and then back to Latch) or from a Run Mode, push ⊙ twice to put the controller in Standby Mode and then push ⊙ one more time to return to the Run Mode.

Unlatched Mode: Relay remains latched only as long as the alarm condition is true.

CONTACT CLOSURE SUBMENU:

Press ⊙ **11)** Display flashes previous selection. Press ▲ to N.c. Normally Closed or N.o. Normally Open.

Press ⊙ **12)** Display shows StRd stored message momentarily and then advances to ActV only if it was changed, otherwise press ⊙ to advance to ActV Active Submenu.

Normally Open: If this feature is selected, then the relay is "energized" only when an alarm condition occurs.

Normally Closed: "Fail Safe" Mode. Relay is energized under "normal" conditions and becomes de-energized during alarm or power failure.

ACTIVE SUBMENU:

Press ⊙ **13)** Display flashes previous selection. Press ▲ to scroll through the available selections: AboV Above, bELo Below, HI.Lo HI/Low and bAWd Band. (Band is active if _dEV Deviation was selected).

Press ⊙ **14)** Display shows StRd stored message momentarily and then advances to A.P.oN only if it was changed, otherwise press ⊙ to advance to A.P.oN Alarm Enable/Disable at Power On Submenu.

Above: Alarm 1 condition triggered when the process variable is greater than the Alarm Hi Value (Low value ignored).

Below: Alarm 1 condition triggered when the process variable is less than the Alarm Low Value (Hi value ignored).

Hi/Low: Alarm 1 condition triggered when the process variable is less than the Alarm Low Value or above the Hi Value.

Band: Alarm 1 condition triggered when the process variable is above or below the "band" set around Setpoint 1. Band equals Hi Value (Low Value ignored). A "band" is set around the Setpoint by the instrument only in the "Deviation" Mode.

The Band for the AL 1 would be following the Setpoint 1 value

The Band for the AL 2 would be following the Setpoint 2 value.

The Band or the Deviation Value should be entered under:

AL1 High (if they want Alarm 1)

AL2 High (if they want Alarm 2)

AL Low value is ignored in the Band mode.

Example: if customer requires a Deviation Value of ±10 degrees around a setpoint (using Output 2 as alarm)

Output 2: disabled (this enables the Alarm 2)

Alarm 2: - Deviation

Contact Closure type: Deviation---Band

AL2 High: 10 (Band they want around Setpoint 2)

Then the Band Value is to be entered under AL2 HI: 10 not 80+10 = 90

ALARM ENABLE/DISABLE AT POWER ON:

Press ⊙ **15)** Display flashes previous selection. Press ▲ to EnbL enable or dSbL disable.

Press ⊙ **16)** Display shows StRd stored message. momentarily and then advances to ALR.L only if it was changed, otherwise press ⊙ to advance to the ALR.L Alarm 1 Low Value Submenu.

Note If the alarm is enabled at Power On, the alarm will be active right after reset. If the alarm is disabled at Power On, the alarm will become enabled when the process value enters the non alarm area. The alarm is not active while the process value is approaching Setpoint 1.

ALARM 1 LOW VALUE SUBMENU:

Press ⊙ **17)** Display flashes 1st digit of previous value. Use ▲ and ▼ to enter new value.

Press ▲ & ▼ **18)** Use ▲ and ▼ to enter Alarm 1 Low Value.

Press ⊙ **19)** Display shows StRd storage message momentarily and then advances to ALR.H only, if it was changed, otherwise press ⊙ to advance to ALR.H Alarm 1 Hi Value Submenu.

ALARM 1 HI VALUE SUBMENU:

Press ⊙ **20)** Display flashes 1st digit of previous value. Use ▲ and ▼ to enter new value.

Press ▲ & ▼ **21)** Use ▲ and ▼ to enter Alarm1 Hi Value.

Press ⊙ **22)** Display shows StRd stored message momentarily and then advances to the next menu only, if it was changed, otherwise press ⊙ to advance to the next menu.

3.2.7 Analog Output (Retransmission)

Note ☞ Analog Output can be configured as Retransmission or Control outputs. In this section we will discuss Retransmission Output.

This unit is equipped with two physical outputs that can only be configured as follows: **Alarm 1 & Alarm 2, Alarm 1 & Output 2, Output 1 & Alarm 2, Output 1 & Output 2, Analog Out 1 & Alarm 2, Analog Out 1 & Output 2**. Analog Output is available only, if Analog Output Option board is factory installed.

Note ☞ If Analog Output Option is not installed, the instrument will skip to Alarm 2 Menu.

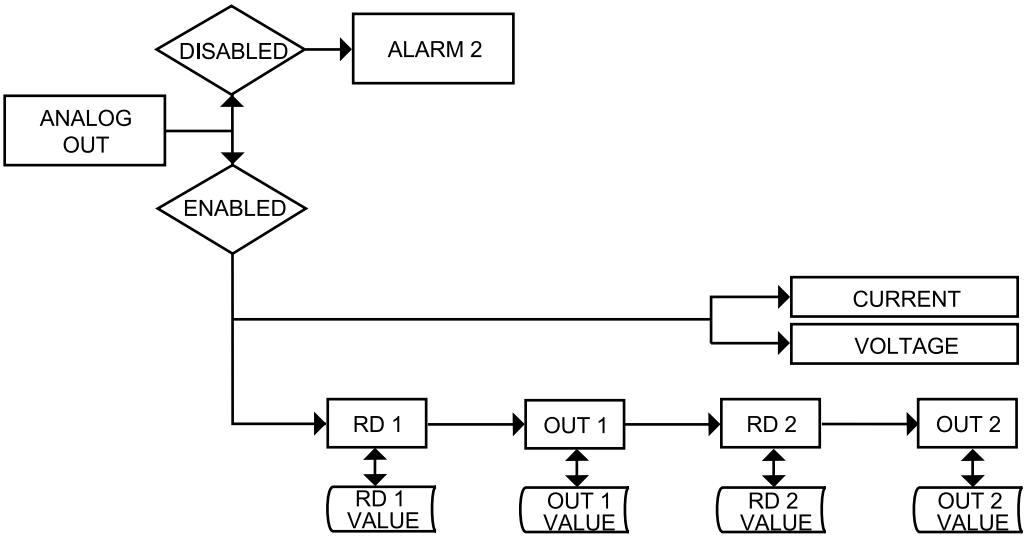

Figure 3.6 Flow Chart for Analog Output (Retransmission)

ENTER ANALOG OUTPUT MENU:

Press ⊙	**1)** Press ⊙, if necessary, until CNFG prompt appears.
Press ⊙	**2)** Display advances to INPt Input Menu.
Press ⊙	**3)** Press ⊙, if necessary, until Display advances to ANLG Analog Output Menu.
Press ⊙	**4)** Display advances to Analog Output ENbL Enable or dSbL Disable Submenu and flashes the previous selection.

ANALOG OUTPUT ENABLE/DISABLE SUBMENU:

Press ▲ **5)** Scroll though the available selection until EnbL displays to use Analog Output Retransmission (output proportional to the input signal).

Press ↵ **6)** Display shows StRd stored message momentarily and then advances to CURR or Volt Submenu only if it was changed, otherwise press ↵ to advance to CURR or Volt Current/Voltage Submenu.

Note ☞ If dSbL Analog Output **Disabled** was selected, all submenus of Analog Output Menu will be skipped and the meter will advance to ALR2 Alarm 2 Menu. If EnbL Analog Output **Enabled** was selected, Output 1 would be automatically **Disabled**, and reassigned as Analog Output.

CURRENT/VOLTAGE SUBMENU:

Press ↵ **7)** Display flashes CURR Current or Volt Voltage.

Press ▲ **8)** Scroll through the available selection: Current or Voltage (Example Volt).

Press ↵ **9)** Display shows StRd stored message momentarily and then advances to Rd 1 Submenu only if it was changed, otherwise press ↵ to advance to Rd 1 Reading 1 Submenu.

READING 1:

Press ↵ **10)** Display flashes 1st digit of previous “Reading 1” value.

Press ▲ & ▼ **11)** Enter “Reading 1” value. (Example 0000)

Press ↵ **12)** Display advances to Out. 1 Out 1 Submenu.

OUT 1:

Press ↵ **13)** Display flashes 1st digit of previous “Out 1” value.

Press ▲ & ▼ **14)** Enter “Out 1” value. (Example 00.00)

Press ↵ **15)** Display advances to Rd 2 Reading 2 Submenu.

READING 2:

Press ↵ **16)** Display flashes 1st digit of previous “Reading 2” value.

Press ▲ & ▼ **17)** Enter “Reading 2” value. (Example 9999)

Press ↵ **18)** Display advances to Out.2 Out 2 Submenu.

OUT 2:

Press ↵ **19)** Display flashes 1st digit of previous “Out 2” value.

Press ▲ & ▼ **20)** Enter “Out 2” value. (Example 10.00)

Press ↵ **21)** Display advances to the ALR2 Alarm 2 Menu.

Note ☞ The above example is for 0-10 V of the entire range of the Process Input and Analog Output. For 0-20 mA output you need to set “Analog Type” to Current and OUT 2 to 20.00.

Accuracy of Analog Output board is +/-1% of FS (Full Scale) when following conditions are satisfied:

1. The input is not scaled below 1% of Input FS (10 mV @ 1 V or 0.2 mA @ 20 mA input ranges).
2. Analog Output is not scaled below 3% of Output FS (300 mV @ 10 V or 0.6 mA @ 20 mA output ranges).

Otherwise certain corrections need to be applied.
For example:
For entire range of process input, the Analog Output on 10 V FS scaled for **300 mV** output range:

Rd1 = 0000, Out1 = 00.00
RD2 = 9999, Out2 = 00.30

The **measured output** will be as follows:

Rd1 = 0000, Out1 = -0.07 V
Rd2 = 9999, Out2 = 0.23 V

This means that for 300 mV output range we have -70 mV offset at zero and at full scale. In order to compensate this 70 mV offset the **correct scaling** will be as follows:

Rd1 = 0000, Out1 = 00.07
Rd2 = 9999, Out2 = 00.37

The above corrections need to be applied only for **Input scaled below 1% of FS** and **Output scaled below 3% of FS** or if you need the **Analog Output accuracy to be better than 1% of FS.**

3.2.8 Alarm 2

This unit is equipped with two physical outputs that can only be configured as follows: **Alarm 1 & Alarm 2, Alarm 1 & Output 2, Output 1 & Alarm 2, Output 1 & Output 2, Analog Out 1 & Alarm 2, Analog Out 1 & Output 2**. Analog Out available only if Analog Output Option board is factory installed.

Note Alarm must be DISABLED if Ramp is ENABLED.

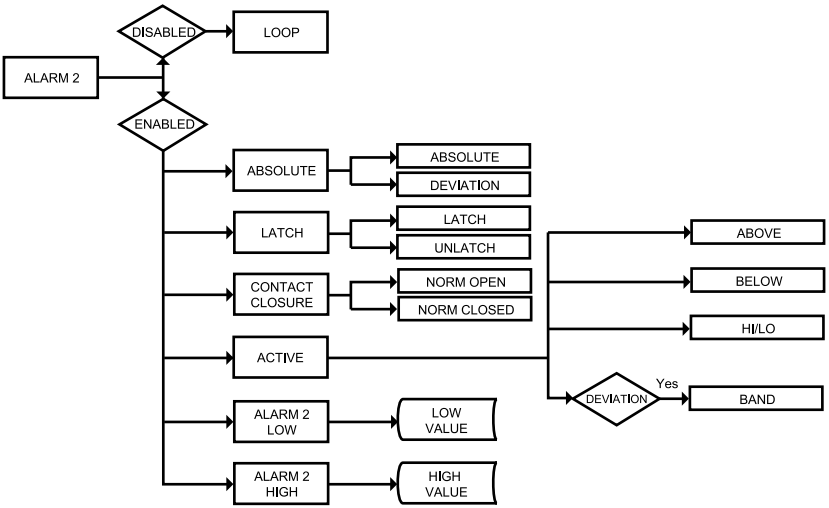

Figure 3.7 Flow Chart for Alarm 2

ENTER ALARM 2 MENU:

Press ⊙ **1)** Press ⊙, if necessary, until CNFG prompt appears.
Press ⊙ **2)** Display advances to INPt Input Menu.
Press ⊙ **3)** Press ⊙, if necessary, until Display advances to ALR2 Alarm 2 Menu.
Press ⊙ **4)** Display advances to Alarm 2 EN6L Enable or dS6L Disable Submenu.

ALARM 2 ENABLE/DISABLE SUBMENU:

Press ⊙ **5)** Display flashes previous selection. Press ▲ until EN6L displays to use Alarm 2.
Press ⊙ **6)** Display shows StRd stored message momentarily and then advances to AbSo only if it was changed, otherwise press ⊙ to advance to AbSo Absolute/Deviation Submenu.

If dS6L Alarm 2 **Disabled** was selected, all submenus of Alarm 2 will be skipped and meter advances to LOOP Loop Break Time Menu. If EN6L Alarm 2 **Enabled** was selected, Output 2 will automatically **Disabled**, and reassigned as Alarm 2.

Note The remaining Alarm 2 menu items are identical to Alarm 1 Menu. Modifying Alarm Settings will not reset the instrument.

3.2.9 Loop Break Time/Field Calibration

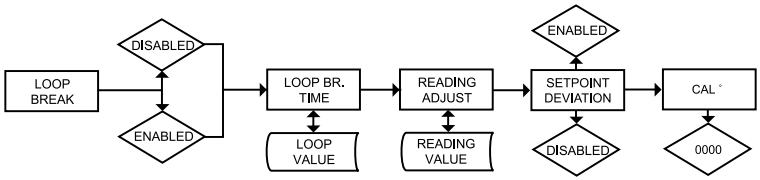

Note It is required that you put the controller in the Standby Mode for any configuration change other than Set Points & Alarms.

Figure 3.8 Flow Chart for Loop Break Time/Field Calibration

ENTER LOOP BREAK TIME MENU:

Press ⊙ **1)** Press ⊙, if necessary, until CNFG prompt appears.
Press ⊙ **2)** Display advances to INPt Input Menu.
Press ⊙ **3)** Press ⊙, if necessary, until Display advances to LOOP Loop Break Time Menu.
Press ⊙ **4)** Display advances to Loop Break Time EnbL Enable or dSbL Disable Submenu and flashes the previous selection.

LOOP BREAK ENABLE/DISABLE SUBMENU:

Press ▲ **5)** Scroll through the available selections: EnbL or dSbL.
Press ⊙ **6)** Display shows StRd stored message momentarily and then advances to b.t 1M Loop Break Time Value Submenu.

Loop Break is an additional safety feature intended to monitor the rate of change of the process value, while approaching the SP1. It is strictly intended as an additional warning system, therefore its use is entirely optional. An active Loop Break will cause the Process Value digits to blink in a rotating pattern. If the process value reaches the set point the blinking will stop and b.t 1M is completed successfully, otherwise bR.AL Break Alarm warning will flash, and Output 1 will be turned off.

LOOP BREAK TIME VALUE SUBMENU:

Press ⊙ **7)** Display flashes 1st digit of previous Loop Value.
Press ▲ & ▼ **8)** Press ▲ and ▼ buttons to enter a new Loop Value (0 to 99.59).
Press ⊙ **9)** Display shows StRd stored message momentarily and then advances to R.Adj Reading Adjust Submenu.

Loop Break Time Value allows the user to determine the time interval in MM:SS (from zero to 99 minutes and 59 seconds) that the Process Value changes at least 10 counts or if the Input Type is either RTD or Thermocouple, the value changes 4° Fahrenheit or 2° Celsius. At the specified time interval, if the process value change is less than the stated rate, flashing b.t 1M will be displayed, the output 1 will be de-energized, and Alarm 1 energized. Loop break time will be disabled when the Process Value (PV) enters the control band.

READING ADJUST SUBMENU:

Press ⊙ **10)** Display flashes 1st digit of previous Reading Adjust value.
Press ▲ & ▼ **11)** Press ▲ and ▼ buttons to enter a new Reading Adjust value (-1999 to 9999).
Press ⊙ **12)** Display shows StRd stored message momentarily and then advances to SP.dV Setpoint Deviation Menu.

3.2.9 Loop Break Time/Field Calibration (continued)

Reading Offset Adjust allows the user to fine tune a minor error of the transducer, however some applications may require a large offset adjust.
(Displayed Process Value = Measured Process Value ± R.ADJ).
Reading Adjust is adjustable between -1999 to 9999. For Temperature Reading only, not Process

SETPOINT DEVIATION ENABLE/DISABLE SUBMENU:

Press ⊙ **13)** Display advances to Setpoint Deviation EnbL Enable or dSbL Disable Submenu and flashes the previous selection.
Press ⊙ **14)** Scroll through the available selections: EnbL or dSbL.
Press ⊙ **15)** Display shows StRd stored message momentarily and then advances to CAL° Menu.

Setpoint Deviation Submenu, if "enabled", allows changes to Setpoint 1 to be made automatically to Setpoint 2. This mode is very helpful if the Process Value changes often. In Setpoint Deviation Mode, set SP2 a certain number of degrees or counts away from SP1 - this relation remains fixed when SP1 is changed. For instance: Setting SP1=200 and SP2=20 and enabling SP.dY means that the absolute value of SP2=220. Moving SP1 to 300, the absolute value of SP2 becomes 320.

THERMOCOUPLE FIELD CALIBRATION SUBMENU:

⚠ **CAUTION:** Do not perform the following steps until you fully understand this entire section.

Note RTD and Process are perfectly calibrated. This section is applicable to Thermocouple (TC) calibration *only*.

Be sure that the TC being used to calibrate the meter is of the type selected in the TC submenu. Place the TC in an ice-bath (or other **0°C / 32°F** environment). In ambient temperature conditions: connect the TC to the meter, apply power to the meter.

⚠ **CAUTION:** Do not proceed with TC calibration unless the above conditions have been in effect for at least one hour.

Press ⊙ **7)** Display shows CAL° .
Press ⊙ **8)** Display shows flashing 0000.
Press ⊙ * **9)** Display will still show flashing 0000.
Press ⊙ * **10)** Display shows OUt 1 (meaning Calibration is complete)

* If you accidently engage the flashing 0000 (CAL° alert) simply re-press the last button you pressed, to avoid unintentionally mis-calibrating your meter.

3.2.10 Output 1

Alarm 1 and Output 1 or Analog Output (Retransmission) share the same contacts on the rear panel connector. If Alarm 1 or Analog Output (Retransmission) is **Enabled**, Output 1 is automatically **Disabled**.

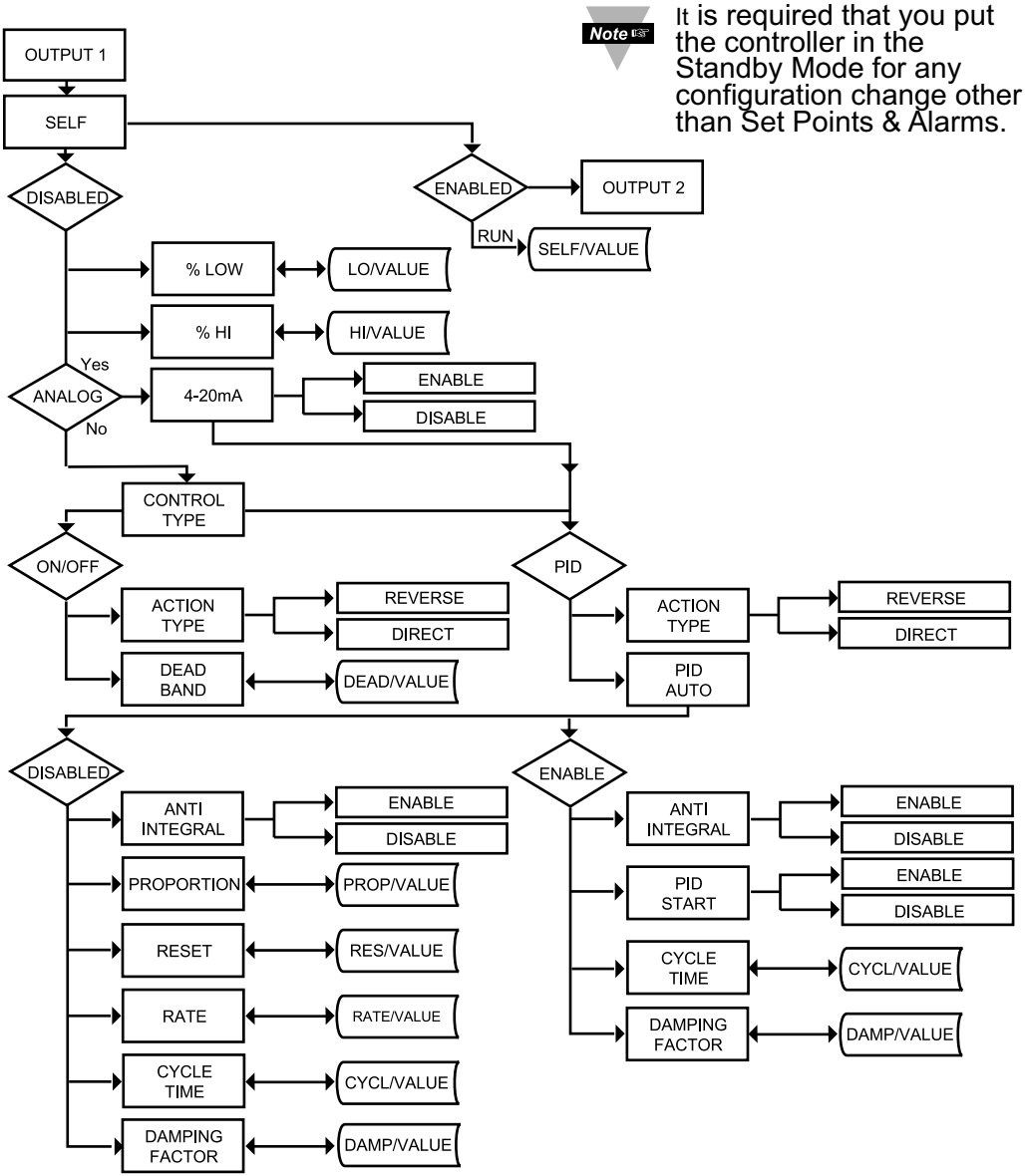

Figure 3.9 Flow Chart for Output 1

ENTER OUTPUT 1 MENU:

Press ⊙ **1)** Press ⊙, if necessary, until CNFG prompt appears.
Press ⊙ **2)** Display advances to INPt Input Menu.
Press ⊙ **3)** Press ⊙, if necessary, until Display advances to OUt 1 Output 1 Menu.
Press ⊙ **4)** Display advances to SELF Self Submenu.

SELF SUBMENU:

The Self Option allows the output of the instrument to be controlled manually from the front panel.

Press ⊙ **5)** Display flashes the current setting of Self, ENbL Enabled or dSbL Disabled.
Press ▲ **6)** Press the ▲ button to select between Enable and Disable.
Press ⊙ **7)** If Self ENbL Enabled was selected, display shows StRd stored message momentarily and then advances to the next menu (Output 1 setting is completed).

The output is now under the direct control of the operator and can be adjusted in the Run Mode (M00.0 to M99.9), by pressing the ▲ and ▼ buttons, where M calls for the Manual (Self) Control. For example, setting of M50.0 of an Analog Output of 0 to 10 Vdc would produce roughly 5 Vdc at the output.

8) If Self dSbL Disabled was selected, display shows StRd stored message momentarily and then advances to oºLO Minimum/Percent Low Submenu of Output 1 Menu.

Note There is a shorter way to Enable or Disable Self Mode. From a Run Mode, press ⊙ and then press ⊙. Self Mode is Enabled now. Press ▲ or ▼ to display **MXX.X**. To disable Self, press ⊙ and then press ⊙. Display goes to the Run Mode. Self Mode is Disabled now.

MINIMUM/PERCENT LOW SUBMENU:

Specify in percent, the minimum value (0000) for control output. If the output is analog proportional (Current or Voltage), then the minimum voltage or current, in percent, is specified. If the output is time proportional (Relay, SSR or Pulse), then the minimum duty-cycle, in percent, is specified.

Press ⊙ **9)** Display flashes 1st digit of previous “Percent Low” setting.
Press ▲ & ▼ **10)** Use ▲ and ▼ buttons to enter a new value for “Percent Low”.
Press ⊙ **11)** Display shows StRd stored message momentarily and then advances to oºH1 Maximum/Percent High Submenu.

MAXIMUM/PERCENT HIGH SUBMENU:

Specify in percent, the maximum value (99) for control output. If the output is analog proportional (Current or Voltage), then the maximum voltage or current, in percent, is specified. If the output is time proportional (Relay, SSR, or Pulse), then the maximum duty-cycle, in percent, is specified.

Press ⊙ **12)** Display flashes 1st digit of previous “Percent High” setting.
Press ▲ & ▼ **13)** Use ▲ and ▼ buttons to enter a new value for “Percent High”.
Press ⊙ **14)** Display shows StRd stored message momentarily and then advances to CtRL Control Type Submenu.

Example: On an Analog Output of 0~10 Vdc, a setting of %LO = 10 and %HI = 90, cause the minimum on the control output to be 1 V and the maximum on the control output to be 9 V. The same setting on a time proportional output, will cause 10% duty cycle for the minimum control output and 90% duty cycle for maximum control output. To disable %LO/HI, set LO to 00 and HI to 99. If %LO/HI is at other values than the default (%LO = 00, %HI = 99), SOAK is disabled.

*CONTROL TYPE OUTPUT:

(Relay, SSR, Pulse or Analog)
Press ⊙ **15)** Display flashes ON.OF On/Off or PId Proportional, Integral, Derivative.
Press ▲ **16)** Scroll through the available selections: “ON/OFF” or “PID”.
Press ⊙ **17)** Display flashes StRd stored message momentarily and then advances to ACtN only, if it was changed, otherwise press ⊙ to advance to ACtN Action Type Submenu.

The **ON/OFF** control is a coarse way of controlling the process. The “Dead Band” improves the cycling associated with the On/Off control. The **PID** control is best for processes where the Setpoint is continuously changing and/or a tight control of the process variable is required. PID control requires tuning and adjustment of the "Proportional", "Integral or Reset" and "Derivative or Rate" terms by a trial-and-error method. The instrument provides an "Auto Tuning" feature making the tuning process automatic, possibly optimum.

* If Analog Output (Current/Voltage) is your control Output 1, this menu i.e. CtRL type will not appear, instead 4-20 Current will be displayed. Select EnbL for a 4-20 mA current (2-10 V Voltage) outputs or dSbL for a 0-20 mA current (0-10 V Voltage) outputs. If 4-20 mA is enabled, %HI/LO setting will have no effect.

Note Both Current and Voltage control outputs are active simultaneously.

ACTION TYPE SUBMENU:

The error that results from the measurement of the Process Variable may be positive or negative since it may be greater or smaller than the Setpoint. If a positive error should cause the instrument output to increase (i.e. cooling), it would be called **Direct Acting**. If a negative error should cause the output to increase (i.e. heating), it would be called **Reverse Acting**.

Press ⊙ **18)** Display flashes dRct Direct or RVRS Reverse.
Press ⊙ **19)** Scroll through the available selections: “Direct” or “Reverse”.
Press ⊙ **20)** Display shows StRd stored message momentarily and then advances to AUto only, if it was changed, otherwise press ⊙ to advance to AUto Auto PID Submenu (if PID Control Type was selected).

Note ☞ If **“ON/OFF”** was selected in the Control Type, the display skips to the Dead Band Submenu.

AUTO PID SUBMENU:

Press ⊙ **21)** Display flashes ENbL or dSbL.
Press ⊙ **22)** Scroll through the available selections: “Enable” or “Disable”.
Press ⊙ **23)** Display shows StRd stored message momentarily and then advances to AWtL only, if it was changed, otherwise press ⊙ to advance to AWtL Anti Integral Submenu.

Note ☞ If **“Enabled”**, the controller can determine, by enabling Start PID, the optimum values for the three adjustments — Proportional, Reset and Rate corresponding to P, I, and D. These values may be changed once the auto tuning is complete.

If **“Disabled”** is selected, the user will manually enter these three adjustment values. If you want the instrument to do the auto PID and the P , PI or PID, first select auto disable and enter 0000 for unwanted parameter. i.e. for PI enter 0000 for the rate.

ANTI INTEGRAL SUBMENU:

Press ⊙ **24)** Display flashes ENbL or dSbL.
Press ⊙ **25)** Scroll through the available selections: “Enable” or “Disable”.
Press ⊙ **26)** Display shows StRd stored message momentarily and then advances to StRt only, if it was changed, otherwise press ⊙ to advance to StRt to Start Auto Tune PID Submenu (If auto PID was Enabled).

Note ☞ If Auto PID was disabled display advances to PRoP Proportional Band Submenu.

Note ☞ If Anti Integral (Anti Windup) Submenu **"Enabled"**, this feature allows the error term outside the proportional band to be calculated and accumulated for integration. This may be an important feature in applications where fast response time is desirable.

START AUTO TUNE PID:

Press ⊙ **27)** Display flashes EnbL or dSbL.
Press ▲ **28)** Scroll through the available selections: "Enable" or "Disable".
Press ⊙ **29)** Display shows StRd stored message momentarily and then advances to CYCL only, if it was changed, otherwise press ⊙ to advance to CYCL Cycle Time Submenu.

Note ☞ If **"Enabled"**, the controller is ready to calculate P, PI or PID parameters. The instrument performs this by activating the output and observing the delay and rate at which the Process Value changes. The setpoints must be at least 18°F or 10°C above the (PV) Process Value in order to perform Auto Tune, otherwise an error message will be displayed.

To start Auto Tune PID select PID, enable Auto PID and enable Start PID. Sometimes Auto PID parameter needs fine tuning i.e. for each 5°F over shoot increase the Proportional Band (PB) by 15% and for each ±1°F fluctuation at the Setpoint (SP) increase reset by 20%.

Once started, display shows A.tUN with letters blinking in the rotating pattern. When auto tune stops, display will show process value. Do not perform any operations or settings before first stopping Auto Tune. Any alarms or other output is disabled during Auto Tune.

Note ☞ If **"AUTO PID"** was **"DISABLED"**, the display will show the following three submenus. This allows the user to manually enter values for Proportional, Reset and Rate terms corresponding to P, I, and D. It also can be used for auto PID for disabling unwanted parameter i.e. PI enter 0000 for rate.

PROPORTIONAL BAND SUBMENU:

Press ⊙ **30)** Display flashes 1st digit of the previous **P** PRoP Proportional band value.
Press ▲ & ▼ **31)** Press ▲ and ▼ buttons to enter a new "Proportional Band" value.
Press ⊙ **32)** Display shows StRd stored message momentarily and then advances to RESt only, if it was changed, otherwise press ⊙ to advance to RESt Reset Setup Submenu.

Proportional band is in degrees of temperature or counts of process. Proportional band is defined, as the change in the instrument input to cause a 100% change in the controller output.

RESET SETUP SUBMENU:

Press ⊙ **33)** Display flashes 1st digit of the previous **I** RESt Reset value.
Press ▲ & ▼ **34)** Press ▲ and ▼ buttons to enter a new "Reset" value.
Press ⊙ **35)** Display shows StRd stored message momentarily and then advances to RAtE only, if it was changed, otherwise press ⊙ to advance to RAtE Rate Setup Submenu.

Reset unit is in seconds 0-3999.

RATE SETUP SUBMENU:

Press ⊙ **36)** Display flashes 1st digit of previous **D** RAtE Rate value.
Press ▲ & ▼ **37)** Press ▲ and ▼ buttons to enter a new RAtE value.
Press ⊙ **38)** Display shows StRd stored message momentarily and then advances to the CYCL only, if it was changed, otherwise press ⊙ to advance to CYCL Cycle Time submenu for RTD and Thermocouple types.

Rate unit is in seconds 000.0-399.9.

Note If the Output 1 is Analog Option the display skips to Damping Factor.

CYCLE TIME SUBMENU:

Press ⊙ **39)** Display flashes 1st digit of the previous CYCL Cycle Time value.
Press ▲ & ▼ **40)** Press ▲ and ▼ buttons to enter a new "Cycle Time" value. (1 to 199 seconds)
Press ⊙ **41)** Display shows StRd stored message momentarily and then advances to dPNG only, if it was changed, otherwise press ⊙ to advance to dPNG Damping Factor Submenu.

A Cycle Time selected between 1 and 199 seconds determines the total On/Off time of each proportional cycle. For example, a 15 second cycle time means that every 15 seconds the output will turn on for part or all of the cycle. For Relay control outputs, do not select a cycle time of less than 7 seconds or the relays' lifetime will be shortened. For a cycle time of less than 7 seconds select SSR or DC pulse. Use an external SSR with the DC pulse option for higher currents (higher than 1 Amp).

DAMPING FACTOR SUBMENU:

Press ⊙ **42)** Display flashes the previous “Damping Factor” selection.
Press ▲ **43)** Scroll through the available selections: 0000, 0001, 0002, 0003, 0004, 0005, 0006, 0007.
Press ⊙ **44)** Display flashes StRd stored message and then advances to Out2 only, if it was changed, otherwise press ⊙ to advance to Out2 Output 2 Menu.

Damping Factor is a measure of speed, overshoot, and undershoot in which the process variable responds to the output changes of the instrument, which were used during the Auto Tune. This value is typically set to the ratio of Rate to Reset. This Default value is (0003). For fast response time, this value should be decreased while for slow response time it should be increased.

Note ☞ The "DEADBAND" Submenu will only appear if "ON/OFF" was selected from the "Control Type" Menu.

DEADBAND SUBMENU:

Press ⊙ **45)** Display flashes 1st digit of the previous dEAd Deadband value.
Press ▲ & ▼ **46)** Press ▲ and ▼ buttons to enter a new “Deadband” value.
Press ⊙ **47)** Display shows StRd stored message and then advances to Out2 only, if it was changed, otherwise press ⊙ to advance to Out2 Output 2 Menu.

Dead Band units are the same as Proportional Band units.

Tip ☞ The Dead Band or neutral zone is the number of degrees or counts (if Input Type is Process) around the Setpoint which the Process Variable must pass above or below the Setpoint, before the output changes state.

3.2.11 Output 2

Output 2 and Alarm 2 share the same contacts on the rear panel connector. If Alarm 2 is **Enabled**, Output 2 is automatically **Disabled**.

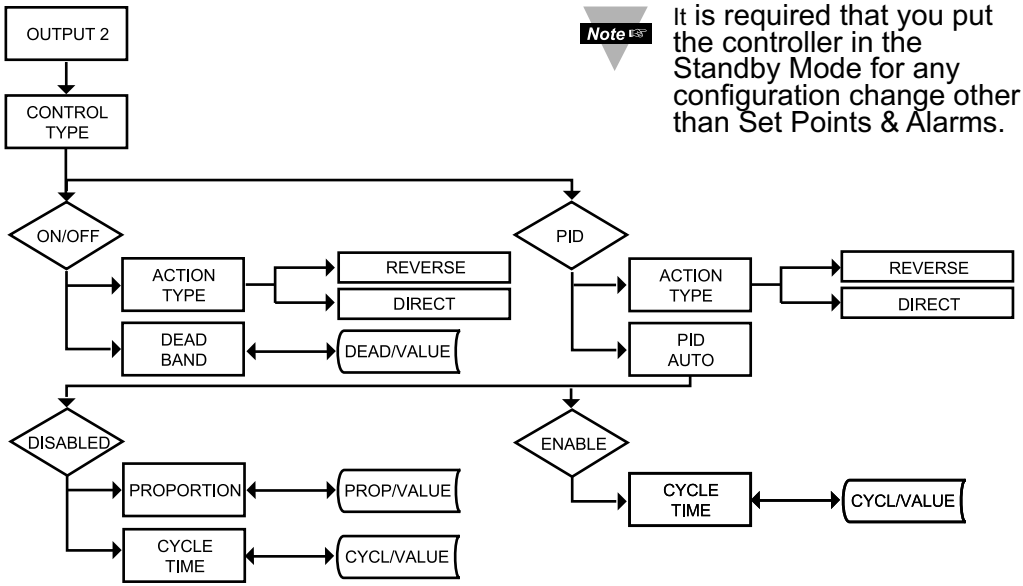

Figure 3.10 Flow Chart for Output 2

ENTER OUTPUT 2 MENU:

Press ⊙ **1)** Press ⊙, if necessary, until CNFG prompt appears.
Press ⊙ **2)** Display advances to INPt Input Menu.
Press ⊙ **3)** Press ⊙, if necessary, until Display advances to OUt2 Output 2 Menu.
Press ⊙ **4)** Display advances to CtRL Control Type Submenu.

CONTROL TYPE SUBMENU:

Press ⊙ **3)** Display flashes ON.OF ON/OFF, or PId PID.
Press ▲ **4)** Scroll through the available selections: “ON/OFF” or “PID”.
Press ⊙ **5)** Display shows StRd stored message momentarily and then advances to ActN only, if it was changed, otherwise press ⊙ to advance to ActN Action Type Submenu.

The ON/OFF control is a coarse way of controlling the Process. The “Dead Band” improves the cycling associated with the ON/Off control. The PID control is best for processes where the Setpoint is continuously changing and/or tight control of the Process Variable is required.

ACTION TYPE SUBMENU:

The error that results from the measurement of the Process Variable may be positive or negative since it may be greater or smaller than the Setpoint. If a positive error should cause the instrument output to increase (i.e. cooling), it would be called **Direct Acting**. If a negative error should cause the output to decrease (i.e. heating), it would be called **Reverse Acting**.

Press ⊙ **6)** Display flashes dRct Direct or RVRS Reverse.
Press ▲ **7)** Scroll through the available selections: “Direct” or “Reverse”.
Press ⊙ **8)** Display shows StRd stored message momentarily and then advances to Auto only, if it was changed, otherwise press ⊙ to advance to Auto Auto PID Submenu (If PID Control type was selected).

Note ☞ If ON/OFF was selected in the Control Type, the display skips to the Dead Band Submenu.

AUTO PID SUBMENU:

Press ⊙ **9)** Display flashes EnbL Enable or dSbL Disable.
Press ▲ **10)** Scroll through the available selections: “Enable” or “Disable”.

Note ☞ If "Enabled", the PID parameter of Output 1 will be copied to Output 2.

Press ⊙ **11)** Display shows StRd stored message momentarily and then advances to the next submenu only, if it was changed, otherwise press ⊙ to advance to the next submenu.

Note ☞ If AUTO PID was ENABLED", the display skips to the CYCL CYCLE TIME submenu. If "AUTO PID" was "DISABLED", the display will show PRoP PROPORTIONAL BAND Submenu allowing the user to manually enter the Proportional Band value.

The Reset and Rate value are the same as Output 1.

PROPORTIONAL BAND SUBMENU:

Press ⊙ **12)** Display flashes 1st digit of the previous Proportional Band value.
Press ▲ & ▼ **13)** Press ▲ and ▼ buttons to enter a new Proportional Band value.
Press ⊙ **14)** Display shows StRd stored message momentarily and then advances to CYCL only, if it was changed, otherwise press ⊙ to advance to the CYCL Cycle Time Submenu.

Note ☞ Refer to “Proportional Band” Submenu of “Output 1” Menu.

CYCLE TIME SUBMENU:

Press ⊙ **15)** Display flashes 1st digit of the previous “Cycle Time” value.
Press ▲ & ▼ **16)** Press ▲ and ▼ buttons to enter a new “Cycle Time” value (1 to 199 seconds).
Press ⊙ **17)** Display shows StRd stored message momentarily and then advances to RAMP only, if it was changed, otherwise press ⊙ to advance to RAMP Ramp Value Submenu.

A cycle time selected between 1 to 199 seconds indicates the total On/Off time of each proportional cycle. For example, a 15 second cycle time means that every 15 seconds the output will turn on for part or all of the cycle. For Relays’ Control Outputs, do not select a cycle time of less than 7 seconds or the relays’ lifetime will be shortened. For a cycle time of less than 7 seconds select SSR or DC pulse. Use an external SSR with the DC pulse option for higher current (higher than 1 Amp).

Note ☞ **The DEADBAND Submenu will only appear if the ON/OFF was selected from the "Control Type" Submenu.**

DEADBAND SUBMENU:

Press ⊙ **18)** Display flashes 1st digit of the previous “Dead Band” value.
Press ▲ & ▼ **19)** Press ▲ and ▼ buttons to enter a new “Dead Band” value.
Press ⊙ **20)** Display shows StRd stored message momentarily and then advances to RAMP only, if it was changed, otherwise press ⊙ to advance to RAMP Ramp Value Menu.

Dead Band units are the same as Proportional Band units.

Tip ☞ The Dead Band or neutral zone is the number of degrees or counts (if Input Type is Process) around the Setpoint which the Process Variable must pass above or below the Setpoint, before the output changes state.

3.2.12 Ramp & Soak

Note ☞ Alarm must be DISABLED if Ramp is ENABLED.

Note ☞ It is required that you put the controller in the Standby Mode for any configuration change other than Set Points & Alarms.

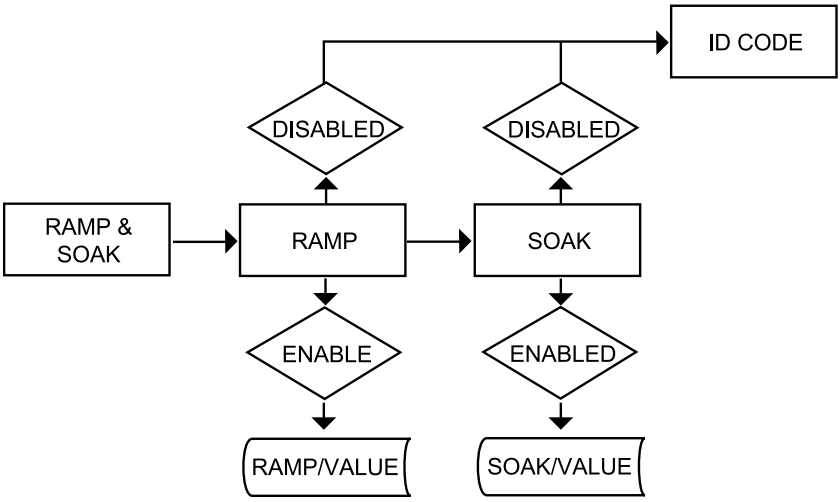

Figure 3.11 Flow Chart for Ramp and Soak

ENTER RAMP AND SOAK MENU:

Press ⊙ **1)** Press ⊙, if necessary, until CNFG prompt appears.
Press ⊙ **2)** Display advances to INPt Input Menu.
Press ⊙ **3)** Press ⊙, if necessary, until Display advances to RAMP Ramp and SOAK Soak Menu.

RAMP ENABLE/DISABLE SUBMENU:

Press ⊙ **4)** Display advances to “Ramp Enable/Disable” Submenu and flashes EN6L or dS6L.
Press ▲ **5)** Scroll through the available selections: “Enable” or “Disable”.
Press ⊙ **6)** Display shows StRd stored message momentarily and then advances to SOAK Soak Enable/Disable Menu.

Note ☞ If RAMP **Disable** was selected, display skips to the next menu item (ID Code).

SOAK ENABLE/DISABLE SUBMENU:

Press ⊙ **7)** Display flashes EnbL or dSbL.
Press ▲ **8)** Scroll through the available selections: “Enable” or “Disable”.
Press ⊙ **9)** Display shows StRd stored message momentarily and then advances to “Ramp Value” Submenu.

Ramp & Soak provides users with the flexibility to slowly bring the Process Variable (PV) to the desired setpoint. Ramp & Soak values are specified in HH.MM format. The Ramp value indicates the time specified to bring the process variable to Setpoint 1 (SP1). Once the set point is reached, the PID takes over and the Process Variable will be controlled at the desired set point indefinitely. If Soak is enabled, PID will control the Process Variable at the specified Setpoint for the duration of Soak time and then will turn off Output 1. To start a new Ramp/Soak cycle, reset the instrument by pressing ⊙ and then ▼ button.

An active Ramp/Soak will change SP1 one degree above the PV and will cause the most significant digit to blink. The SP1 will be incremented by one degree until it reaches the original SP1. The minimum Ramp time must be at least twice the time that it will take the PV to reach the Setpoint Value (SV) with OUT 1 fully ON.

RAMP VALUE SUBMENU:

Press ⊙ **10)** Display flashes 1st digit of previous stored “Ramp Value”.
Press ▲ & ▼ **11)** Press ▲ and ▼ buttons to enter a new “Ramp Value”.
Press ⊙ **12)** Display shows StRd stored message momentarily and then advances to “Soak Value” Submenu.

SOAK VALUE SUBMENU:

Press ⊙ **13)** Display flashes 1st digit of previous stored “Soak Value”.
Press ▲ & ▼ **14)** Press ▲ and ▼ buttons to enter a new “Soak Value”.
Press ⊙ **15)** Display shows StRd stored message and advances to the Id ID Code Menu.

The Ramp and Soak time is 00:00 to 99:59 i.e. HH.MM. (from zero to 99 hours and 59 minutes) During Ramp & Soak do not perform any operations or settings before first stopping it. Any alarms or other output are disabled during this time. To stop Ramp & Soak first put instrument into Standby Mode, then go to Ramp & Soak Menu and disable it.

3.2.13 ID CODE

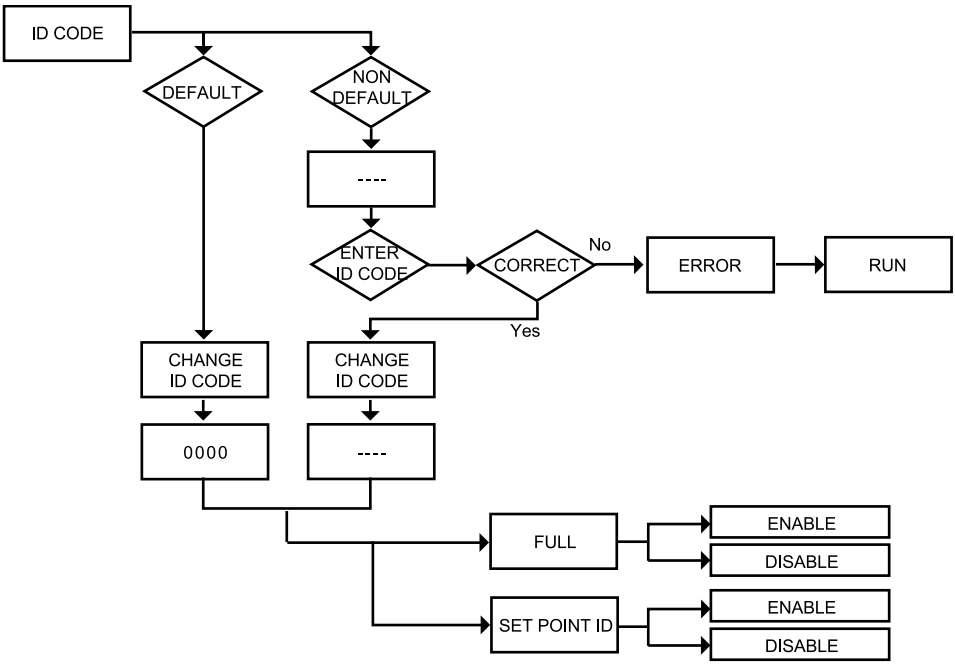

Figure 3.12 Flow Chart for ID Code

ENTER ID CODE MENU:

Press ⊙ **1)** Press ⊙, if necessary, until CNFG prompt appears.
Press ⊙ **2)** Display advances to INPt Input Menu.
Press ⊙ **3)** Press ⊙, if necessary, until Display advances to Id ID Code Menu.

ENTERING OR CHANGING YOUR (NON-DEFAULT) ID CODE:

Press ⊙ **4)** Display advances to ____ with 1st under score flashing.
Press ▲ & ▼ **5)** Press ▲ and ▼ to enter your 4-digit "ID Code" number.
Press ⊙ **6)** Display advances to CH.Id Change ID Code Submenu.

Note If entered "ID Code" is incorrect display shows ERRo Error message momentarily and then skips to the Run Mode.

Press ⊙ **7)** Display flashes the first digit of previous entered "ID Code" number.
Press ▲ & ▼ **8)** Press ▲ and ▼ buttons to enter your new "ID Code" number.
Press ⊙ **9)** Display shows StRd stored message momentarily and then advances to the FULL Full Security Submenu.

ENTERING OR CHANGING YOUR (DEFAULT) ID CODE:

Enter Id menu (Repeat steps from 1 to 3).

Press ⊙ **10)** Display advances to CH.Id Change ID Code Submenu.
Press ⊙ **11)** Display shows 0000 message with flashing 1st digit.

Note ☞ If you want to change your default “ID Code” you can do it now, otherwise press ⊙ and menu will skip to FULL Full Security Submenu.

Press ▲ & ▼ **12)** Press ▲ and ▼ buttons to enter your new “ID Code” number.
Press ⊙ **13)** Display shows StRd stored message momentarily and then advances to the FULL Full Security Submenu.

FULL SECURITY LEVEL SUBMENU:

Press ⊙ **14)** Display flashes EnbL Enable or dSbL Disable.
Press ▲ **15)** Scroll through the available selections: “Enable” or “Disable”.
Press ⊙ **16)** Display shows StRd stored message momentarily and then advances to SP.Id Setpoint/ID Submenu.

Note ☞ If "Full" Security Level is "Enabled" and the user attempts to enter the Main Menu, they will be prompted for an ID Code. The ID Code should be correct to enter the instrument Menu item.

SETPOINT/ID SECURITY LEVEL SUBMENU:

Note ☞ This Security Level can be functional only if FULL Security Level is Disabled.

Press ⊙ **17)** Display flashes EnbL Enable or dSbL Disable.
Press ▲ **18)** Scroll through the available selections: “Enable” or “Disable”.
Press ⊙ **19)** Display shows StRd stored message momentarily and then advances to COMM Communication Submenu.

Note ☞ If **"Setpoint/ID"** Security Level is **"Enabled"** and the user attempts to advance into the CNFG Configuration Menu, he will be prompted for ID Code number. The ID Code should be correct to proceed into the Configuration Menu, otherwise display will show an Error and skip to the Run Mode.

Note ☞ If **“Full”** and **“Setpoint/ID”** Security Levels are "**Disabled**", the ID code will be “Disabled” and user will not be asked for ID Code to enter the Menu items (“ID” Submenu will not show up in “ID/Setpoint” Menu).

3.2.14 COMMUNICATION OPTION

Purchasing the controller with Serial Communications permits an instrument to be configured or monitored from an IBM PC compatible computer using software available from **the website or on the CD-ROM enclosed with your shipment**. For complete instructions on the use of the Communications Option, refer to the Serial Communications Reference Manual.

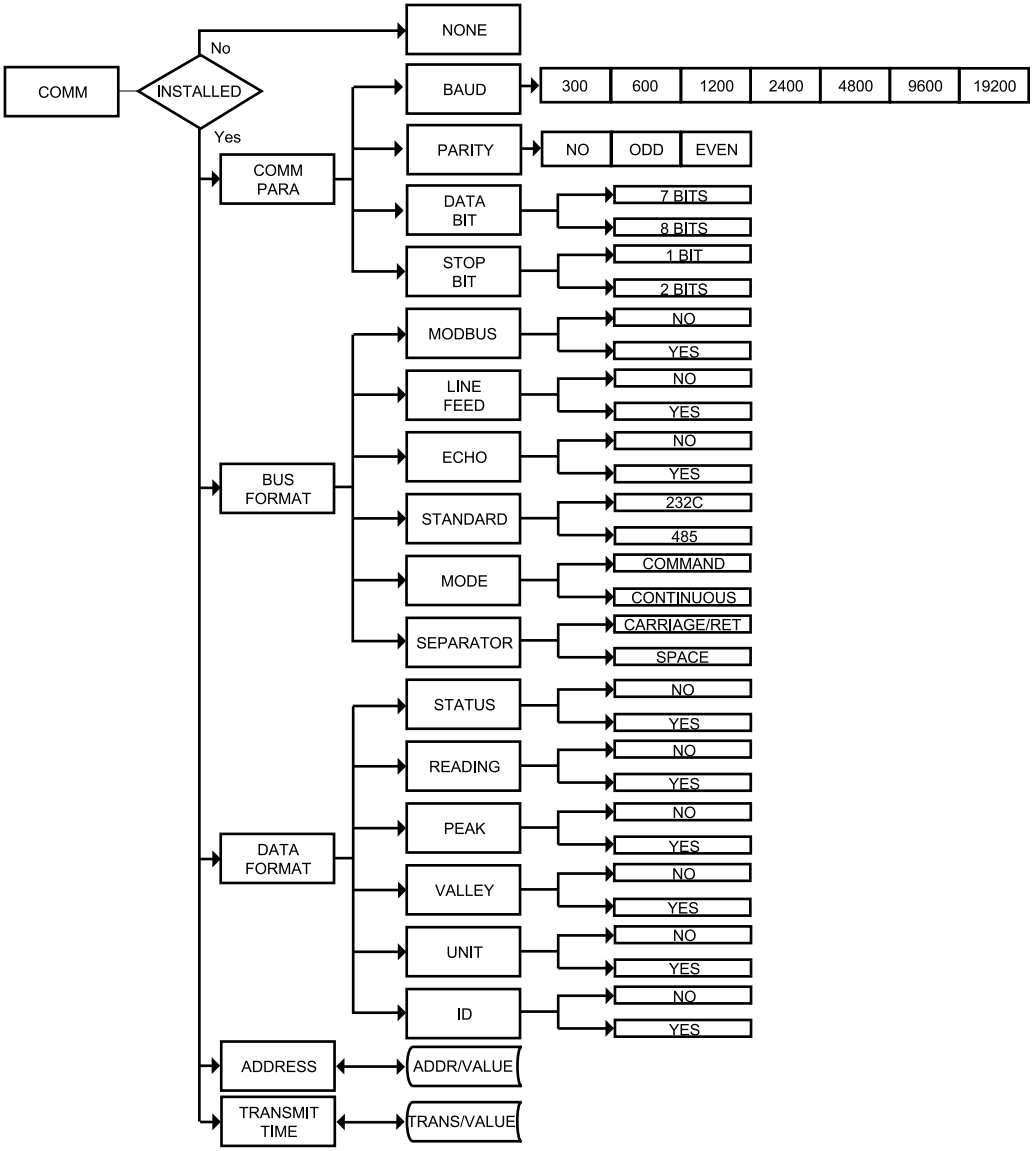

Figure 3.13 Flow Chart for Communication Option

ENTER COMMUNICATION OPTION MENU:

Press ⊙ **1)** Press ⊙, if necessary, until CNFG prompt appears.
Press ⊙ **2)** Display advances to INPt Input Menu.
Press ⊙ **3)** Press ⊙, if necessary, until Display advances to COMM Communication Options Menu.
Press ⊙ **4)** Display advances to C.PAR Communication Parameters Submenu.

Note If Communication Option is not installed, the display shows NONE and skips to the Color Display Menu.

COMMUNICATION PARAMETERS SUBMENU:

Allows the user to adjust Serial Communications Settings of the instrument. When connecting an instrument to a computer or other device, the Communications Parameters must match. Generally the default settings (as shown in Section 5) should be utilized.

Press ⊙ **5)** Display advances to bAUd Baud Submenu.

BAUD SUBMENU:

Press ⊙ **6)** Display flashes previous selection for bAUd value.
Press ▲ **7)** Scroll through the available selections: 300_, 600_, 1200, 2400, 4800, 9600, 19.2K.
Press ⊙ **8)** Display shows StRd stored message momentarily and then advances to PRtY only, if it was changed, otherwise press ⊙ to advance to PRtY Parity Submenu.

PARITY SUBMENU:

Press ⊙ **9)** Display flashes previous selection for “Parity”.
Press ▲ **10)** Scroll through the available selections: NO, ODD, EVEN.
Press ⊙ **11)** Display shows StRd stored message momentarily and then advances to dAtA only, if it was changed, otherwise press ⊙ to advance to dAtA Data Bit Submenu.

DATA BIT SUBMENU:

Press ⊙ **12)** Display flashes previous selection for “Data Bit”.
Press ▲ **13)** Scroll through the available selections: 7-BIT, 8-BIT.
Press ⊙ **14)** Display shows StRd stored message and then advances to StOP only, if it was changed, otherwise press ⊙ to advance to StOP Stop Bit Submenu.

STOP BIT SUBMENU:

Press ⊙ **15)** Display flashes previous selection for “Stop Bit”.
Press ▲ **16)** Scroll through the available selections: 1-BIT, 2-BIT.
Press ⊙ **17)** Display shows StRd stored message momentarily and then advances to bUS.F only, if it was changed, otherwise press ⊙ to advance to bUS.F Bus Format Submenu.

BUS FORMAT SUBMENU:

Determines Communications Standards and Command/Data Formats for transferring information into and out of the controller via the Serial Communications Bus. Bus Format submenus essentially determine how and when data can be accessed via the Serial Communications of the device.

Press ⊙ **18)** Display advances to M.bUS Modbus Submenu.

MODBUS PROTOCOL SUBMENU:

Press ⊙ **19)** Display flashes previous selection for M.bUS.
Press ▲ **20)** Scroll through the available selections: NO, YES.
Press ⊙ **21)** Display shows StRd stored message momentarily and then advances to _LF_ only, if it was changed, otherwise press ⊙ to advance to _LF_ Line Feed submenu.

Note ☞ To select iSeries Protocol, set Modbus submenu to “No”.
To select Modbus Protocol, set Modbus submenu to “Yes”.

Note ☞ If Modbus Protocol was selected, the following Communications Parameters must be set as: No Parity, 8-bit Data Bit, 1-Stop Bit. Do not attempt to change these parameters.

LINE FEED SUBMENU:

Determines if data sent from the instrument will have a Line Feed appended to the end - useful for viewing or logging results on separate lines when displayed on communications software at a computer.

Press ⊙ **22)** Display flashes previous selection for “Line Feed”.
Press ▲ **23)** Scroll through the available selections: NO, YES.
Press ⊙ **24)** Display shows StRd stored message momentarily and then advances to ECHO only, if it was changed, otherwise press ⊙ to advance to ECHO Echo Submenu.

ECHO SUBMENU:

When valid commands are sent to the instrument, this determines whether the command will be echoed to the Serial Bus. Use of echo is recommended in most situations, especially to help verify that data was received and recognized by the controller.

Press ⏎ **25)** Display flashes previous selection for “Echo”.
Press ▲ **26)** Scroll through the available selections: NO, YES.
Press ⏎ **27)** Display flashes StRd stored message momentarily and then advances to StNd only if it was changed, otherwise press ⏎ to advance to StNd Communication Standard Submenu.

COMMUNICATION INTERFACE STANDARD SUBMENU:

Determines whether device should be connected to an RS-232C serial port (as is commonly used on IBM PC-compatible computers) or via an RS-485 bus connected through appropriate RS-232/485 converter. When used in RS-485 Mode, the device must be accessed with an appropriate Address Value as selected in the Address Submenu described later.

Press ⏎ **28)** Display flashes previous selection for “Standard”.
Press ▲ **29)** Scroll through the available selections: 232C, 485.
Press ⏎ **30)** Display shows StRd stored message momentarily and then advances to ModE only, if it was changed, otherwise press ⏎ to advance to ModE Data Flow Mode Submenu.

DATA FLOW MODE SUBMENU:

Determines whether the instrument will wait for commands and data requests from the Serial Bus or whether the instrument will send data automatically and continuously to the Serial Bus. Devices configured for the RS-485 Communications Standard operate properly only under Command Mode.

Press ⏎ **31)** Display flashes previous selection for “Mode”.
Press ▲ **32)** Scroll through the available selections: CMd_ “Command”, CoNt “Continuous”.
Press ⏎ **33)** Display shows StRd stored message momentarily and then advances to SEPR only, if it was changed, otherwise press ⏎ to advance to SEPR Data Separation Submenu.

DATA SEPARATION CHARACTER SUBMENU:

Determines whether data sent from the device in Continuous Data Flow Mode will be separated by spaces or by Carriage Returns.

Press ⏎ **34)** Display flashes previous selection for “Separation” Submenu.
Press ▲ **35)** Scroll through the available selections: SPCE “Space” or _cR_ “Carriage Return”.
Press ⏎ **36)** Display shows StRd stored message momentarily and then advances to dAt.F only, if it was changed, otherwise press ⏎ to advance to dAt.F Data Format Submenu.

DATA FORMAT SUBMENU:

Preformatted data can be sent automatically or upon request from the controller. Use the Data Format Submenus to determine what data will be sent in this preformatted data string. Refer to the iSeries Communications Manual for more information about the data format. At least one of the following suboptions must be enabled and hence output data to the Serial Bus.

Note This menu is applicable for Continuous Mode of RS-232 communication.

Press ⊙ **37)** Display advances to StAt Alarm Status Submenu.

ALARM STATUS SUBMENU:

Includes Alarm Status bytes in the data string.

Press ⊙ **38)** Display flashes previous selection for “Status” (alarm status).
Press ▲ **39)** Scroll through the available selections: NO, YES.
Press ⊙ **40)** Display shows StRd stored message momentarily and then advances to RdNG only, if it was changed, otherwise press ⊙ to advance to RdNG Reading Submenu.

MAIN READING SUBMENU:

Includes Main Reading in the data string.

Press ⊙ **41)** Display flashes previous selection for “Reading”.
Press ▲ **42)** Scroll through the available selections: NO, YES.
Press ⊙ **43)** Display shows StRd stored message momentarily and then advances to PEAK only, if it was changed, otherwise press ⊙ to advance to PEAK Peak Submenu.

PEAK VALUE SUBMENU:

Includes Peak Value in the data string.

Press ⊙ **44)** Display flashes previous selection for PEAK Submenu.
Press ▲ **45)** Scroll through the available selections: NO, YES.
Press ⊙ **46)** Display shows StRd stored message momentarily and then advances to VALY only, it was changed, otherwise press ⊙ to advance to VALY Valley Submenu.

VALLEY VALUE SUBMENU:

Includes Valley Value in the data string.

Press ⊙ **47)** Display flashes previous selection for “Valley”.
Press ▲ **48)** Scroll through the available selections: NO, YES.
Press ⊙ **49)** Display shows StRd stored message momentarily and then advances to UNIt only, if it was changed, otherwise press ⊙ to advance to UNIt Temperature Unit Submenu.

TEMPERATURE UNIT SUBMENU:

Includes a byte in the data string to indicate whether reading is in Celsius or Fahrenheit.

Press ⊙ **50)** Display flashes previous selection for UNIt.
Press ▲ **51)** Scroll through the available selections: NO, YES.
Press ⊙ **52)** Display shows StRd stored message momentarily and then advances to AddR only, if it was changed, otherwise press ⊙ to advance to AddR Address Setup Submenu.

ADDRESS SETUP SUBMENU:

Note This menu is applicable to the RS-485 Option only.

Press ⊙ **53)** Display advances to “Address Value” (0000 to 0199) Submenu.

ADDRESS VALUE SUBMENU:

Press ⊙ **54)** Display flashes 1st digit of previously stored Address Value.
Press ▲ & ▼ **55)** Press ▲ and ▼ to enter new “Address Value”.
Press ⊙ **56)** Display shows StRd stored message momentarily and then advances to tR.tM only, if it was changed, otherwise press ⊙ to advance to tR.tM Transmit Time Interval Submenu.

TRANSMIT TIME INTERVAL SUBMENU:

Note This menu is applicable if “Continuous” Mode was selected in the “Data Flow Mode” Submenu and the device is configured as an RS-232C Standard device. Also, one or more options under the Data Format Submenu must be enabled.

Press ⊙ **57)** Display advances to “Transmit Time Value” Submenu.

TRANSMIT TIME INTERVAL VALUE SUBMENU:

Determines the interval at which data will be emitted to the RS-232 Serial Bus when the instrument is in Continuous Data Flow Mode.

Press ⊙ **58)** Display flashes 1st digit of previous “Transmit Time Value” in seconds.
Press ▲ & ▼ **59)** Press ▲ and ▼ to enter new “Transmit Time Value”, e.g. 0030 will send the data every 30 seconds in Continuous Mode.
Press ⊙ **60)** Display shows StRd stored message momentarily and then advances to COLR only, if it was changed, otherwise press ⊙ to advance to COLR Color Display Selection Menu.

Note **For more details, refer to the Communication Manual available at the website listed in the cover page of this manual.**

3.2.15 DISPLAY COLOR SELECTION

This submenu allows the user to select the color of the display.

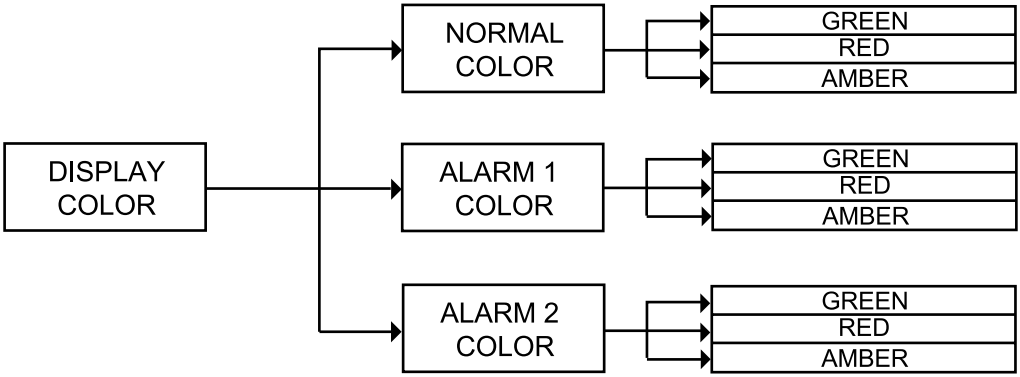

Figure 3.14 Flow Chart for Display Color Selection

ENTER DISPLAY COLOR SELECTION MENU:

Press ⊙ **1)** Press ⊙, if necessary, until CNFG prompt appears.
Press ⊙ **2)** Display advances to INPt Input Menu.
Press ⊙ **3)** Press ⊙, if necessary, until Display advances to COLR Display Color Selection Menu.
Press ⊙ **4)** Display advances to N.CLR Normal Color Submenu.

NORMAL COLOR DISPLAY SUBMENU:

Press ⊙ **5)** Display flashes the previous selection for "Normal Color".
Press ▲ **6)** Scroll through the available selections: GRN, REd or AMbR.
Press ⊙ **7)** Display shows StRd stored message momentarily and then advances to 1.CLR only, if it was changed, otherwise press ⊙ to advance to 1.CLR Alarm 1 Display Color Submenu.

The menu below allows the user to change the color of display when alarm is triggered.

ALARM 1 DISPLAY COLOR SUBMENU:

Press ⊙ **8)** Display flashes previous selection for "Alarm 1 Color Display".
Press ▲ **9)** Scroll through the available selections: GRN, REd or AMbR.
Press ⊙ **10)** Display shows StRd stored message momentarily and then advances to 2.CLR only, if it was changed, otherwise press ⊙ to advance to 2.CLR Alarm 2 Display Color Submenu.

ALARM 2 DISPLAY COLOR SUBMENU:

Press ⏎ **11)** Display flashes previous selection for “Alarm 2 Color Display”.
Press ▲ **12)** Scroll through the available selections: GRN, REd or AMbR.
Press ⏎ **13)** Display shows StRd stored message momentarily and then momentarily shows the software version number, followed by RSt Reset, and then proceeds to the Run Mode.

Tip IN ORDER TO DISPLAY ONE COLOR, SET THE SAME DISPLAY COLOR ON ALL THREE SUBMENUS ABOVE.

Note If user wants the Display to change color every time when both Alarm 1 and Alarm 2 are triggered, the Alarm values should be set in such a way that Alarm 1 value is always on the top of Alarm 2 value, otherwise value of Alarm 1 will overwrite value of Alarm 2 and Display Color would not change when Alarm 2 is triggered.

Example 1:
Output 1 & Output 2 = SSR
Alarm Setup: Absolute, Above, Alarm 2 HI Value “ALR.H” = 200, Alarm 1 HI Value “ALR.H” = 400
"Color Display" Setup: Normal Color “N.CLR” = Green, Alarm 1 Color “1.CLR” = Amber, Alarm 2 Color “2.CLR” = Red

Display Colors change sequences:

Example 2:
Output 1 & Output 2 = Pulse
Alarm Setup: Absolute, Below, Alarm 2 Low Value “ALR.L” = 300, Alarm 1 Low Value “ALR.L” = 100
Color Display Setup: "N.CLR" = Green, "1.CLR" = Amber, "2.CLR" = Red

Display Colors change sequences:

Example 3:
Output 1 = Analog Output (Alarm 1 disabled), Setpoint 1 = 300,
Output 2 = Relay, Setpoint 2 = 200
Alarm 1 & 2 Setup: Deviation, Band, “ALR.H” = 10
Color Display Setup: “N.CLR” = Green, “1.CLR” = Amber, “2.CLR” = Red

Display Colors change sequences:

Tip

Alarm 1 is designed to monitor the Process Value around the Setpoint 1. Alarm 2 is designed to monitor the Process Value around the Setpoint 2. If Analog Output Option board is installed (Alarm 1 is disabled), only Alarm 2 is active and only two colors are available.

Example 4:
Output 1 = Relay, Setpoint 1 = 200
Output 2 = Relay, Setpoint 2 = 200
Alarm 1 Setup: Deviation, Band, “ALR.H” = 20
Alarm 2 Setup: Deviation, Hi/Low, “ALR.H” = 10, “ALR.L” = 5
Color Display Setup: “N.CLR” = Green, “1.CLR” = Amber, “2.CLR” = Red

Display colors change sequences:

Note

Reset: The instrument automatically resets after the last menu of the Configuration Mode has been entered. After the instrument resets, it advances to the Run Mode.

PART 4
SPECIFICATIONS

Accuracy
±0.5°C temp; 0.03% reading process

Resolution
1°/0.1°; 10 µV process

Temperature Stability
1) RTD: 0.04°C/°C
2) TC @ 25°C (77°F): 0.05°C/°C
- Cold Junction Compensation
3) Process: 50 ppm/°C

NMRR
60 dB

CMRR
120 dB

A/D Conversion
Dual slope

Reading Rate
3 samples per second

Digital Filter
Programmable

Display
4-digit, 9-segment LED
- 10.2 mm (0.40"): i32, i16, i16D (Dual Display), i8DV (Dual Vertical)
- 21 mm (0.83"): i8
- 10.2 mm (0.40") and 21 mm (0.83"): i8DH (Dual Horizontal)
  red, green and amber programmable colors for process variable, set point and temperature units

Warm up to Rated Accuracy
30 min.

INPUT
Input Types
Thermocouple, RTD, Analog Voltage, Analog Current

Thermocouple Type (ITS 90)
J, K, T, E, R, S, B, C, N, L

Thermocouple Lead Resistance
100 ohm max

RTD Input (ITS 68)
100/500/1000 Ω Pt sensor, 2-, 3- or 4-wire; 0.00385 or 0.00392 curve

Voltage Input
0 to 100 mV, 0 to 1 V, 0 to 10 Vdc

Input Impedance
10 MΩ for 100 mV
1 MΩ for 1 or 10 Vdc

Current Input
0 to 20 mA (5 ohm load)

Configuration
Single-ended

Polarity
Unipolar

Step Response
0.7 sec for 99.9%

Decimal Selection
None, 0.1 for temperature
None, 0.1, 0.01 or 0.001 for process

Setpoint Adjustment
-1999 to +9999 counts

Span Adjustment
0.001 to 9999 counts

Offset Adjustment
-1999 to +9999

CONTROL
Action
Reverse (heat) or direct (cool)

Modes
Time and Amplitude Proportional Control Modes; selectable Manual or Auto PID, Proportional, Proportional with Integral, Proportional with Derivative with Anti-reset Windup and ON/OFF

Rate
0 to 399.9 seconds

Reset
0 to 3999 seconds

Cycle Time
1 to 199 seconds; set to 0 for ON/OFF operation

Gain
0.5 to 100% of span; Setpoints 1 or 2

Damping
0000 to 0008

Soak
00.00 to 99.59 (HH:MM), or OFF

Ramp to Setpoint
00.00 to 99.59 (HH:MM), or OFF

Auto Tune
Operator initiated from front panel

CONTROL OUTPUT 1 & 2
Relay
250 Vac or 30 Vdc @ 3 A (Resistive Load); configurable for on/off, PID and Ramp and Soak

Output 1: SPDT type, can be configured as Alarm 1 output

Output 2: SPDT type, can be configured as Alarm 2 output

SSR
20-265 Vac @ 0.05-0.5 A (Resistive Load); continuous

DC Pulse
Non-Isolated; 10 Vdc @ 20 mA

Analog Output (Output 1 only)
Non-Isolated, Proportional 0 to 10 Vdc or 0 to 20 mA; 500 Ω max

NETWORK AND COMMUNICATIONS (Optional -C24, -C4EI, -EI)
Ethernet: Standards Compliance IEEE 802.3 10Base-T
Supported Protocols: TCP/IP, ARP, HTTPGET

RS-232/RS-422/RS-485/MODBUS:
Selectable from menu; both ASCII and modbus protocol selectable from menu. Programmable 300 to 19.2 K baud; complete programmable setup capability; program to transmit current display, alarm status, min/max, actual measured input value and status.

RS-485
Addressable from 0 to 199

Connection
Screw terminals

ALARM 1 & 2 (programmable):
Type
Same as Output 1 & 2

Operation
High/low, above/below, band, latch/unlatch, normally open/normally closed and process/deviation; front panel configurations

ANALOG OUTPUT (programmable)
Non-Isolated, Retransmission 0 to 10 Vdc or 0 to 20 mA, 500 Ω max (Output 1 only). Accuracy is ± 1% of FS when following conditions are satisfied.

1) Input is not scaled below 1% of Input FS.
2) Analog Output is not scaled below 3% of Output FS.

EXCITATION
(optional in place of Communication)
24 Vdc @ 25 mA
Not available for Low Power Option

INSULATION
Power to Input/Output
2300 Vac per 1 min. test
1500 Vac per 1 min. test
(Low Voltage/Power Option)
Power to Relays/SSR Outputs
2300 Vac per 1 min. test
Relays/SSR to Relay/SSR Outputs
2300 Vac per 1 min. test
RS-232/485 to Inputs/Outputs
500 Vac per 1 min. test

Approvals
FM, UL, C-UL, and
see CE Approval Section

GENERAL

Line Voltage/Power
90-240 Vac +/-10%, 50-400 Hz*
110-375 Vdc, equivalent voltage
4 W, power for i8, i8C, i16, i32 Models
5 W, power for i8DV, i8DH, i16D Models
* *No CE compliance above 60 Hz*

Low Voltage/Power Option
12-36 Vdc, **3 W**, power for i8, i16, i32
20-36 Vdc, **4 W**, power for i8DV, i8DH, i16D
External power source must meet
Safety Agency Approvals.
* *Units can be powered safely with 24 Vac power but, no Certification for CE/UL are claimed.*

External Fuse Required
Time-Delay, UL 248-14 listed:
100 mA/250 V
400 mA/250 V (Low Voltage/Power Option)
Time-Lag, IEC 127-3 recognized:
100 mA/250 V
400 mA/250 V (Low Voltage/Power Option)

Environmental Conditions
- All models: 0 to 55°C (32 to 131°F), 90% RH non-condensing
- i8DV, i8DH, i8C, i16D: 0 to 50°C (32 to 122°F) for UL only. 90% RH non-condensing

Protection
NEMA-4x (IP65) front bezel

Dimensions
i/8 Series:
48 H x 96 W x 127 mm D
(1.89 x 3.78 x 5")

i/8 Compact Series:
48 H x 96 W x 74 mm D
(1.89 x 3.78 x 2.91")

i/16 Series:
48 H x 48 W x 127 mm D
(1.89 x 1.89 x 5")

i/32 Series:
25.4 H x 48 W x 127 mm D
(1.0 x 1.89 x 5")

Panel Cutout
i/8 Series:
45 H x 92 mm W (1.772" x 3.622 "),
1/8 DIN

i/16 Series:
45 mm (1.772") square, 1/16 DIN

i/32 Series:
22.5 H x 45 mm W (0.886" x 1.772"),
1/32 DIN

Weight
i/8 Series: 295 g (0.65 lb)

i/16 Series: 159 g (0.35 lb)

i/32 Series: 127 g (0.28 lb)

Table 4.1 Input Properties

TC	Input Type	Range	Accuracy*
J	Iron-Constantan	-210 to 760°C -346 to 1400°F	0.4°C 0.7°F
K	CHROMEGA®- ALOMEGA®	-270 to -160°C -160 to 1372°C -454 to -256°F -256 to 2502°F	1.0°C 0.4°C 1.8°F 0.7°F
T	Copper-Constantan	-270 to -190°C -190 to 400°C -454 to -310°F -310 to 752°F	1.0°C 0.4°C 1.8°F 0.7°F
E	CHROMEGA- Constantan	-270 to -220°C -220 to 1000°C -454 to -364°F -364 to 1832°F	1.0°C 0.4°C 1.8°F 0.7°F
R	Pt/13%Rh-Pt	-50 to 40°C 40 to 1788°C -58 to 104°F 104 to 3250°F	1.0°C 0.5°C 1.8°F 0.9°F
S	Pt/10%Rh-Pt	-50 to 100°C 100 to 1768°C -58 to 212°F 212 to 3214°F	1.0°C 0.5°C 1.8°F 0.9°F
B	30%Rh-Pt/ 6%Rh-Pt	200 to 640°C 640 to 1820°C 212 to 1184°F 1184 to 3308°F	1.0°C 0.5°C 1.8°F 0.9°F
C	5%Re-W/ 26%Re-W	0 to 2354°C 32 to 4253°F	0.4°C 0.7°F
N	Nicrosil-Nisil	-250 to -100°C -100 to 1300°C -418 to -148°F -148 to 2372°F	1.0°C 0.4°C 1.8°F 0.7°F
L	J DIN	-200 to 900°C -328 to 1652°F	0.4°C 0.7°F
RTD	Pt, 0.00385, 100 Ω, 500 Ω, 1000 Ω	200 to 900°C -328 to 1652°F	0.4°C 0.7°F
RTD	Pt, 0.00392, 100 Ω, 500 Ω, 1000 Ω	-200 to 850°C -328 to 1562°F	0.4°C 0.7°F
PROCESS	Voltage	0 to 100 mV, 0 to 1 V, 0 to 10 Vdc	0.03% rdg 0.03% rdg
PROCESS	Current	0 to 20 mA, 4 to 20 mA	0.03% rdg

PART 5
FACTORY PRESET VALUES

Table 5.1 Factory preset value

MENU ITEMS	FACTORY PRESET VALUES	NOTES
Set Point 1 (SP1)	000.0	
Set Point 2 (SP2)	000.0	
Input:		
Input Type (INPT)	TC, type K	
Reading Configuration (RDG):		
Decimal Point (DEC.P)	FFF.F	
Temperature unit (TEMP)	°F	
Filter value (FLTR)	0004	
Alarm 1 & 2:		
Alarm 1 (ALR1), Alarm 2 (ALR2)	Disable (DSBL)	
Absolute/Deviation (ABSO/DEV)	Absolute (ABSO)	
Latch/Unlatch (LTCH/UNLT)	Unlatch (UNLT)	
Contact Closure (CT.CL)	Normally Open (N.O.)	
Active (ACTV)	Above (ABOV)	
Alarm At Power On (A.P.ON)	Disable (DSBL)	Alarm 1 only
Alarm Low (ALR.L)	-100.0	
Alarm High (ALR.H)	400.0	
LOOP:		
Loop Break Time (LOOP)	Disable (DSBL)	
Loop Value (B.TIM)	00:59	
Reading Adjust Value (R.ADJ)	000.0	
Setpoint Deviation (SP.dV)	Disable (DSBL)	
ANALOG OUTPUT (Retransmission):		
Analog Output (ANLG)	Enabled (ENBL)	
Current/Voltage (CURR/VOLT)	Voltage (VOLT)	
Scale and Offset	Reading: 0 - 999.9 cts, Output: 0 - 10 V	
OUTPUT 1 & 2:		
Self (SELF)	Disabled (DSBL)	Output 1 only
% Low Value (%LO)	0000	Output 1 only
% High Value (%HI)	0099	Output 1 only
Control Type (CTRL)	On/Off	
Action Type (ACTN)	Reverse (RVRS)	
Dead Band (DEAD)	020.0	
PID Auto (AUTO)	Disable (DSBL)	
Anti Integral (ANTI)	Disable (DSBL)	Output 1 only
Proportion Value (PROP)	020.0	
Reset Value (REST)	0180	Output 1 only
Rate Value (RATE)	0000	Output 1 only
Cycle Value (CYCL)	0007	
Damping Factor (DPNG)	0003	

MENU ITEMS	FACTORY PRESET VALUES	NOTES
Ramp & Soak (RAMP):		
Ramp (RAMP)	Disable (DSBL)	
Soak (SOAK)	Disable (DSBL)	
Ramp Value (RAMP)	00:00	
Soak Value (SOAK)	00:00	
ID:		
ID Value	0000	
Full ID (FULL)	Disable (DSBL)	
Set Point ID (ID.SP)	Disable (DSBL)	
Communication Parameters:		
Baud Rate (BAUD)	9600	
Parity (PRTY)	Odd	
Data bit (DATA)	7 bit	
Stop Bit	1 bit	
Modbus Protocol (M.BUS)	No	
Line Feed (LF)	No	
Echo (ECHO)	Yes	
Standard Interface (STND)	RS-232 (232C)	
Command Mode (MODE)	Command (CMD)	
Separation (SEPR)	Space (SPCE)	
Alarm Status (STAT)	No	
Reading (RDNG)	Yes	
Peak	No	
Valley (VALY)	No	
Units (UNIT)	No	
Multipoint Address (ADDR)	0001	
Transmit Time (TR.TM)	0016	
Display Color (COLR):		
Normal Color (N.CLR)	Green (GRN)	
Alarm 1 Color (1.CLR)	Red (RED)	
Alarm 2 Color (2.CLR)	Amber (AMBR)	

PART 6
CE APPROVALS INFORMATION

This product conforms to the EMC directive 89/336/EEC amended by 93/68/EEC, and with the European Low Voltage Directive 72/23/EEC.

Electrical Safety EN61010-1:2001

Safety requirements for electrical equipment for measurement, control and laboratory.

Double Insulation

Pollution Degree 2

Dielectric withstand Test per 1 min

- Power to Input/Output: 2300Vac (3250Vdc)
- Power to Input/Output: (Low Voltage dc Power Option*) 1500Vac (2120Vdc)
- Power to Relays/SSR Output: 2300Vac (3250Vdc)
- Ethernet to Inputs: 1500Vac (2120Vdc)
- Isolated RS232 to Inputs: 500Vac (720Vdc)
- Isolated Analog to Inputs: 500Vac (720Vdc)
- Analog/Pulse to Inputs: No Isolation

Measurement Category I

Category I are measurements performed on circuits not directly connected to the Mains Supply (power). Maximum Line-to-Neutral working voltage is 50Vac/dc. This unit should not be used in Measurement Categories II, III, IV.

Transients Overvoltage Surge (1.2 / 50uS pulse)

- Input Power: 2500V
- Input Power: (Low Voltage dc Power Option*) 1500V
- Ethernet: 1500V
- Input/Output Signals: 500V

Note: **Units configured for external low power dc voltage, 12-36Vdc*

EMC EN61326:1997 + and A1:1998 + A2:2001

Immunity and Emissions requirements for electrical equipment for measurement, control and laboratory.

- EMC Emissions Table 4, Class B of EN61326
- EMC Immunity** Table 1 of EN61326

Note: ***I/O signal and control lines require shielded cables and these cables must be located on conductive cable trays or in conduits. Furthermore, the length of these cables should not exceed 30 meters*

Refer to the EMC and Safety installation considerations (Guidelines) of this manual for additional information.

NOTES

NOTES

Warranty/Disclaimer

NEWPORT Electronics, Inc. warrants this unit to be free of defects in materials and workmanship for a period of **one (1) year** from the date of purchase. In addition to NEWPORT's standard warranty period, NEWPORT Electronics will extend the warranty period for **four (4) additional years** if the warranty card enclosed with each instrument is returned to NEWPORT.

If the unit should malfunction, it must be returned to the factory for evaluation. NEWPORT's Customer Service Department will issue an Authorized Return (AR) number immediately upon phone or written request. Upon examination by NEWPORT, if the unit is found to be defective it will be repaired or replaced at no charge. NEWPORT's WARRANTY does not apply to defects resulting from any action of the purchaser, including but not limited to mishandling, improper interfacing, operation outside of design limits, improper repair, or unauthorized modification. This WARRANTY is VOID if the unit shows evidence of having been tampered with or shows evidence of being damaged as a result of excessive corrosion; or current, heat, moisture or vibration; improper specification; misapplication; misuse or other operating conditions outside of NEWPORT's control. Components which wear are not warranted, including but not limited to contact points, fuses, and triacs.

NEWPORT is pleased to offer suggestions on the use of its various products. However, NEWPORT neither assumes responsibility for any omissions or errors nor assumes liability for any damages that result from the use of its products in accordance with information provided by NEWPORT, either verbal or written. NEWPORT warrants only that the parts manufactured by it will be as specified and free of defects. NEWPORT MAKES NO OTHER WARRANTIES OR REPRESENTATIONS OF ANY KIND WHATSOEVER, EXPRESSED OR IMPLIED, EXCEPT THAT OF TITLE, AND ALL IMPLIED WARRANTIES INCLUDING ANY WARRANTY OF MERCHANTABILITY AND FITNESS FOR A PARTICULAR PURPOSE ARE HEREBY DISCLAIMED. LIMITATION OF LIABILITY: The remedies of purchaser set forth herein are exclusive and the total liability of NEWPORT with respect to this order, whether based on contract, warranty, negligence, indemnification, strict liability or otherwise, shall not exceed the purchase price of the component upon which liability is based. In no event shall NEWPORT be liable for consequential, incidental or special damages.

CONDITIONS: Equipment sold by NEWPORT is not intended to be used, nor shall it be used: (1) as a "Basic Component" under 10 CFR 21 (NRC), used in or with any nuclear installation or activity; or (2) in medical applications or used on humans. Should any Product(s) be used in or with any nuclear installation or activity, medical application, or used on humans, or misused in any way, NEWPORT assumes no responsibility as set forth in our basic WARRANTY / DISCLAIMER language, and additionally purchaser will indemnify NEWPORT and hold NEWPORT harmless from any liability or damage whatsoever arising out of the use of the Product(s) in such a manner.

Return Requests/Inquiries

Direct all warranty and repair requests/inquiries to the NEWPORT Customer Service Department. BEFORE RETURNING ANY PRODUCT(S) TO NEWPORT, PURCHASER MUST OBTAIN AN AUTHORIZED RETURN (AR) NUMBER FROM NEWPORT'S CUSTOMER SERVICE DEPARTMENT (IN ORDER TO AVOID PROCESSING DELAYS). The assigned AR number should then be marked on the outside of the return package and on any correspondence.

The purchaser is responsible for shipping charges, freight, insurance and proper packaging to prevent breakage in transit.

FOR **WARRANTY** RETURNS, please have the following information available BEFORE contacting NEWPORT:

1. P.O. number under which the product was PURCHASED,
2. Model and serial number of the product under warranty, and
3. Repair instructions and/or specific problems relative to the product.

FOR **NON-WARRANTY** REPAIRS, consult NEWPORT for current repair charges. Have the following information available BEFORE contacting NEWPORT:

1. P.O. number to cover the COST of the repair,
2. Model and serial number of product, and
3. Repair instructions and/or specific problems relative to the product.

NEWPORT's policy is to make running changes, not model changes, whenever an improvement is possible. This affords our customers the latest in technology and engineering.

NEWPORT is a registered trademark of NEWPORT Electronics, Inc.

© Copyright 2004 NEWPORT Electronics, Inc. All rights reserved. This document may not be copied, photocopied, reproduced, translated, or reduced to any electronic medium or machine-readable form, in whole or in part, without prior written consent of NEWPORT Electronics, Inc.

For immediate technical or application assistance please call:

1-800-6397678®
1-800-NEWPORT

Newport Electronics, Inc.
2229 South Yale Street • Santa Ana, CA • 92704 • U.S.A.
TEL: (714) 540-4914 • FAX: (203) 968-7311
Toll Free: 1-800-639-7678 • www.newportUS.com • e-mail:info@newportUS.com
ISO 9001 Certified

Newport Technologies, Inc.
976 Bergar • Laval (Quebec) • H7L 5A1 • Canada
TEL: (514) 335-3183 • FAX: (514) 856-6886
Toll Free: 1-800-639-7678 • www.newport.ca • e-mail:info@newport.ca

Newport Electronics, Ltd.
One Omega Drive • River Bend Technology Centre
Northbank, Irlam • Manchester M44 5BD • United Kingdom
Tel: +44 161 777 6611 • FAX: +44 161 777 6622
Toll Free: 0800 488 488 • www.newportuk.co.uk • e-mail:sales@newportuk.co.uk

Newport Electronics B.V.
Postbus 8034 • 1180 LA Amstelveen • The Netherlands
TEL: +31 20 3472121 • FAX: +31 20 6434643
Toll Free: 0800 0993344 • www.newport.nl • e-mail: info@newport.nl

Newport Electronics spol s.r.o.
Frystatska 184, 733 01 Karviná • Czech Republic
TEL: +420 59 6311899 • FAX: +420 59 6311114
Toll Free: 0800-1-66342 • www.newport.cz • e-mail: info@newport.cz

Newport Electronics GmbH
Daimlerstrasse 26 • D-75392 Deckenpfronn • Germany
TEL: 49 7056 9398-0 • FAX: 49 7056 9398-29
Toll Free: 0800 / 6397678 • www.newport.de • e-mail: sales@newport.de

Newport Electronique S.A.R.L.
11, rue Jacques Cartier • 78280 Guyancourt • France
TEL: +33 1 61 37 29 00 • FAX: +33 1 30 57 54 27
Toll Free: 0800 466 342 • www.newport.fr • e-mail: sales@newport.fr

Mexico and Latin America
FAX: 001 (203) 359-7807
En Español: 001 (203) 359-7803

NEWPORTnet℠ On-Line Service	**Internet e-mail**
www.newportUS.com	info@newportUS.com

NEWPORT Electronics, Inc.

M3355/N/1104